2017

Electronic Laboratory Result Reporting to the Michigan Department of Health and Human Services

HL7 V2.5.1 IMPLEMENTATION GUIDE: ELECTRONIC LABORATORY REPORTING TO PUBLIC HEALTH – VERSION 2.0

1.0 – Introduction 7
1.1 – Purpose 7
1.2 – Audience 7
1.3 – Scope 8
1.3.1 – Other Related Profiles 8
1.3.2 – Condition Reporting 9
1.3.2.1 – Nature of Reporting 9
1.3.2.2 – When to Report 9
1.3.2.3 – What to Report 10
1.3.2.3.1 – Childhood Lead Poisoning Prevention Program-Specific ELR Message Requirements 10
1.3.2.3.2 – HIV/AIDS Program-Specific ELR Message Requirements 10
1.3.2.3.3 – Heavy Metal Analysis Reporting-Specific ELR Requirements 11
1.3.2.3.4 – Additional Requirement for Pregnancy Status When Reporting Specified Conditions 11
1.4 – Conventions 12
1.4.1 – Message Element Attributes 12
1.4.1.0 – Usage Conformance Testing Recommendations 16
2.0 – Messaging Infrastructure 18
2.1 – Messaging Framework 18
2.1.1 – Delimiters 18
2.1.2 – Null Values in Fields versus Components 19
2.1.3 – Lengths 19
2.2 – Use of Escape Sequences in Text Fields 20
2.3 – Data Types 20
3.0 – Message Profile – Public Health Laboratory Messaging 22
3.1 – Use Case Model 22
3.2 – Dynamic Interaction Model 22
3.3 – Dynamic Definitions 23

4.0 – Messages 24
4.1 ORU^R01^ORU_R01 24
4.1.1 – Diagram of ORU^R01^ORU_R01 Message 33
4.2 – Batch Protocol 34
5.0 – Segment and Field Descriptions 35
5.1 – MSH: Message Header Segment 36
5.2 – SFT: Software Segment 43
5.3 – MSA: Acknowledgment Segment 44
5.4 – ERR: Error Segment 45
5.5 – PID: Patient Identification Segment 46
5.6 – NK1: Next of Kin Segment 53
5.7 – PV1: Patient Visit Information 56
5.8 – PV2: Patient Visit, Additional Information Segment 60
5.9 – ORC: Common Order Segment 60
5.10 – OBR: Observation Request Segment 64
5.11 – TQ1: Timing/Quantity Segment 73
5.12 – OBX: Observation/Result Segment 73
5.12.1 – Observation Identifiers, Observation Values, Interpretations and Comments 80
5.13 – SPM: Specimen Segment 83
5.14 – NTE: Notes and Comments Segment 89
6.0 – Vocabulary Constraints 89
Body Site Value Set 89
Country Value Set 89
ELR Reportable Laboratory 90
Observation Identifier Value Set 90
HL7 V3 Observation Method 90
HL70001 – Administrative Sex 90
HL70002 – Marital Status 90
HL70003 – Event Type 90
HL70004 – Patient Class 90
HL70005 – Race Category 91
HL70006 – Religion 91

HL70007 – Admission Type 91
HL70008 – Acknowledgment Code 91
HL70009 – Ambulatory Status 91
HL70023 – Admit Source 91
HL70038 – Order Status 91
HL70061 – Check Digit Scheme 92
HL70063 – Relationship 92
HL70065 – Specimen Action Code 92
HL70069 – Hospital Service 92
HL70074 – Diagnostic Service Section ID 92
HL70076 – Message Type 92
HL70078 – Abnormal Flags 93
HL70080 – Nature of Abnormal Testing 93
HL70085 – Observation Result Status 93
HL70092 – Re-Admission Indicator 93
HL70103 – Processing ID 93
HL70104 – Version ID 93
HL70105 – Source of Comment 94
HL70112 – Discharge Disposition 94
HL70119 – Order Control Codes 94
HL70121 – Response Flag 94
HL70123 – Results Status 94
HL70125 – Value Type 95
HL70131 – Contact Code 95
HL70136 – Yes/No Indicator 95
HL70137 – Mail Claim Party 95
HL70140 – Military Service 95
HL70141 – Military Rank/Grade 95
HL70142 – Military Status 95
HL70144 – Eligibility Source 95
HL70145 – Room Type 95
HL70146 – Amount Type 96

HL70148 – Money or Percentage Indicator 96
HL70155 – Accept/Application Acknowledgment Condition 96
HL70163 – Body Site 96
HL70177 – Confidentiality Code 96
HL70189 – Ethnic Group 96
HL70190 – Address Type 97
HL70191 – Type of Referenced Data 97
HL70200 – Name Type 97
HL70201 – Telecommunication Use Code 97
HL70202 – Telecommunication Equipment Type 97
HL70203 – Identifier Type 98
HL70204 – Organizational Name Type 98
HL70207 – Processing Mode 98
HL70211 – Alternative Character Sets 98
HL70215 – Publicity Code 98
HL70220 – Living Arrangement 98
HL70223 – Living Dependency 99
HL70231 – Student Status 99
HL70232 – Insurance Company Contact Reason 99
HL70291 – Subtype of Referenced Data 99
HL70299 – Encoding 99
HL70301 – Universal ID Type 99
HL70305 – Person Location Type 99
HL70311 – Job Status 99
HL70326 – Visit Indicator 100
HL70335 – Repeat Pattern 100
HL70344 – Patient's Relationship to Insured 100
HL70354 – Message Structure 100
HL70356 – Alternate Character Set Handling Scheme 100
HL70357 – Message Error Condition Codes 100
HL70360 – Degree/License/ Certificate 101
HL70364 – Comment Type 101

HL70369 – Specimen Role 101
HL70371 – Additive Preservative 101
HL70396 – Coding System 101
HL70399 – Country Code 102
HL70429 – Production Class Code 102
HL70444 – Name Assembly Order 102
HL70445 – Identity Reliability Code 102
HL70465 – Name/Address Representation 102
HL70472 – TQ Conjunction ID 103
HL70482 – Order Type 103
HL70483 – Authorization Mode 103
HL70488 – Specimen Collection Method 103
HL70490 – Specimen Rejection Reason 103
HL70491 – Specimen Quality 104
HL70492 – Specimen Appropriateness 104
HL70493 – Specimen Condition 104
HL70494 – Specimen Child Role 104
HL70495 – Body Site Modifier 104
HL70507 – Observation Result Handling 104
HL70516 – Error Severity 105
HL70529 – Precision 105
Change Log 106

1.0 – Introduction

The Electronic Laboratory Result Reporting to the Michigan Department of Health and Human Services: HL7 V2.5.1 Implementation Guide: Electronic Laboratory Reporting to Public Health is the Michigan Department of Health and Human Services (MDHHS) public health version of the *HL7 Version 2.5.1 Implementation Guide: Electronic Laboratory Reporting to Public Health (US Realm), Release 1* (hereinafter referred to as the Parent Implementation Guide). The use case describes the transmission of laboratory-reportable findings to local and State health agencies, using the HL7 2.5.1 ORU^R01 message. It includes a reference to batch processing. It does not cover querying patient demographics or querying of laboratory results.

Where necessary, specific references have been made to the Parent Implementation Guide (e.g., see: 2.3 – Data Types). This implementation guide is the complete representation of message and structure requirements for the MDHHS receiver. The Parent Implementation Guide, where necessary, has been modified to meet MDHHS need. If and where inconsistencies may exist between the Parent Implementation Guide and this guide, this guide shall take precedent (see section 1.4 – Conventions).

1.1 – Purpose

This guide contains the necessary specifications for laboratory results reporting to local and State health agencies. In particular, this guide addresses messaging content and dynamics related to the transmission of Laboratory Reportable Result Messages/ELR for communicable disease, HIV, blood lead levels, and heavy metal reporting. Health care providers (including physicians, clinical laboratories, primary and secondary schools, childcare centers, and camps) are required to report the occurrence or suspected occurrence of any disease, condition, or infection as identified in the Michigan Communicable Disease Rules. Please see §1.3.2 – Condition Reporting for more information.

In the past, these reports were written by hand on forms provided by health departments and mailed to appropriate offices, or manually completed with the Michigan Disease Surveillance System (MDSS). With the advent of ELR, it has become possible for laboratories to send reportable data to health departments electronically. It should be noted that this guide does not cover reporting of results from laboratory to laboratory.

This document is intended to meet the needs and requirements of implementation guidance for communicable disease surveillance (including HIV), blood lead level reporting, and heavy metal reporting at the Michigan Department of Health and Human Services (MDHHS), replacing the previous documentation regarding Electronic Laboratory Reporting (ELR). It does not replace the need for documentation of the constraints of specific implementations.

1.2 – Audience

This guide is designed for use by analysts and developers who require guidance on construction of HL7 2.5.1 to meet MDHHS standards for ELR. Users of this guide should be familiar with the details of HL7 message construction and processing. This guide is not intended to be a tutorial on that subject.

1.3 – Scope

This specification covers the exchange of laboratory results from the testing source to appropriate local and State public health agencies. One of the primary features of this implementation guide is its focus on key points of broad interoperability. These key points include the following:

- **Use of strong identifiers for key information objects** – These information objects include patients, orders, providers and organizations. A strong identifier is one that uniquely identifies the object in question in a global fashion. This means that the identifier includes enough information to remain unique when taken out of the context within which the identifier was created. This is accomplished through the use of assigning authorities for the identifier. In this guide, an assigning authority is normally handled as an ISO Object Identifier (OID). The combination of the identifier and the assigning authority should always be unique. This uniqueness ensures that each identifier can be broadly shared among independent healthcare organizations and still point to its originally associated object.
- **Use of Vocabulary Standards** – This guide calls for specific vocabulary standards for the exchange of laboratory information. Use of standard vocabularies is important for a number of reasons. Use of standard vocabularies allows broad distribution of healthcare information without the need for individual institutions to exchange master files for data such as test codes, result codes, etc. Each institution maps its own local vocabularies to the standard code, allowing information to be shared broadly, rather than remaining isolated as a single island of information. Standard vocabularies, particularly coded laboratory results, enable more automated decision support for patient healthcare, as well as more automated public health surveillance of populations.

1.3.1 – Other Related Profiles

This guide documents a message profile for Electronic Laboratory Reporting to Public Health (ELR Receiver profile). Several other profiles are referenced, including NHSN Receiver and Lab to EHR Receiver (HL7 Version 2.5.1 Implementation Guide: Orders and Observations; Interoperable Laboratory Result Reporting to EHR, Release 1).

This document should not be considered the sole source of information for these other profiles. For more information, please reference the Parent Implementation Guide.

1.3.2 – Condition Reporting

The authority to establish communicable disease reporting requirements resides with the State of Michigan, Department of Health and Human Services (MDHHS), as established by the Michigan Public Health Code (Public Act 368 of 1978, as amended).

1.3.2.1 – Nature of Reporting

Health care providers are required to report communicable diseases to Public Health for several reasons, including:

1. To identify outbreaks and epidemics. If an unusual number of cases occur, local health authorities must investigate to control the spread of the disease.
2. To enable preventive treatment and/or education to be provided.
3. To help target prevention programs, identify care needs, and use scarce prevention resources efficiently.
4. To evaluate the success of long term control efforts.
5. To facilitate epidemiologic research to uncover a preventable cause.
6. To assist with national and international disease surveillance efforts. For some diseases that are unusual in Michigan, we are part of a national network that the federal government depends on to determine whether national or international investigations are needed.
7. Compliance with Michigan's public health laws.

1.3.2.2 – When to Report

To assist health care providers and other institutions in reporting, the Michigan Department of Health and Human Services has prepared the Health Care Professional's Guide to Disease Reporting in Michigan: A Summary of the Michigan Communicable Disease Rules, found at: http://www.michigan.gov/documents/hlth_care_prof_guide_167371_7.pdf.

A current and complete list of reportable diseases, conditions, and infections can be found at: http://www.michigan.gov/cdinfo.

In addition, Michigan health care professionals and laboratories are also authorized to report any condition, disease, or infection judged by them to indicate that the health of the public is threatened.

1.3.2.3 – What to Report

An electronic lab report (ELR) must contain a patient's name and demographic information (including, address, phone number, ethnicity, race, date of birth, parent/guardian contact information, etc.); provider and facility information; lab(s) performed, their specimen information, and their results.

For additional information on the specific segment, field, and component requirements within the ELR message, please see sections 5.0 – Segment and Field Descriptions and 6.0 – Vocabulary Constraints.

1.3.2.3.1 – Childhood Lead Poisoning Prevention Program-Specific ELR Message Requirements

When reporting blood lead levels (BLLs), the MDHHS's Childhood Lead Poisoning Prevention Program (CLPPP) requires additional information to be included in the ELR message, in addition the standard guidance included in this guide (section 1.3.2.3 – What to Report). For additional information on CLPPP, please visit: http://www.michigan.gov/lead/0,5417,7-310--305271--,00.html

- *Please note that BLL reporting only applies to facilities who are approved and registered with CLPPP at MDHHS*.

Additional information for CLPPP must follow prescribed placement within the ELR message. The additional information required in messages destined for CLPPP include the following:

- Date Specimen was analyzed (in OBX-19)
- Sample Source Site (in SPM-8)
- Parent/Guardian name and contact information (in NK1: Next of Kin Segment)
- Patient's Social Security Number (in PID-3)
- Name of Patient's Employer (in NK1-13) *if* Patient is sixteen (16) years of age or older.
- Provider Name and Contact Information (in OBR: Observation Request Segment and/or ORC: Common Order Segment)
- At least one additional contact person name and phone number (in any iteration of an available NK1: Next of Kin Segment)

1.3.2.3.2 – HIV/AIDS Program-Specific ELR Message Requirements

The additional information required in messages communicating HIV/AIDS laboratory results must include, in addition the standard guidance included in this guide (section 1.3.2.3 – What to Report), all of the following:

- Date of Birth (in lieu of patient age optionality)
- Country of Birth – *if known*
- Provider Name, Address, and Phone Number – *required*
- Facility Name, Address, and Phone Number – *required*
- Patient Social Security Number (SSN) – *if known*

1.3.2.3.3 – Heavy Metal Analysis Reporting-Specific ELR Requirements

As promulgated in rule R 325.62 "Reportable Information" of Heavy Metal and Pesticide Analysis Reporting (for a copy, please visit: http://w3.lara.state.mi.us/orr/Files/AdminCode/323_10301_AdminCode.pdf), the name and address of the individual's employer is required in messages communicating heavy metal analysis results in addition to the standard guidance included in this guide (section 1.3.2.3 – What to Report).

1.3.2.3.4 – Additional Requirement for Pregnancy Status When Reporting Specified Conditions

A pregnancy status flag is required for females between the ages of 10 and 60 when reporting any of the following conditions:

- Hepatitis B
- Hepatitis C
- Chlamydia
- Gonorrhea
- Syphilis
- HIV/AIDS
- Listeriosis
- Novel Influenza
- Rubella
- Measles
- Varicella

Message senders should use the following MDHHS-designated flags within field OBR-13 ("Relevant Clinical Information"):

- For a confirmed pregnancy status, please report: PRENATAL
- For a confirmed non-pregnancy status, please report: PREG_NO
- For an unknown pregnancy status, please report: PREG_UNK

If pregnancy status is not designated for females when reporting any of the above conditions, MDHHS will assume an unknown status.

1.4 – Conventions

This guide adheres to the following conventions:

- The guide is constructed assuming the implementer has access to the 2.5.1 version of the HL7 Standard. Although some information from the standard is included in this implementation guide, much information from the standard has not been repeated here.
    - There are rare instances where this IG may differ from the national HL7 2.5.1 standard. In such cases, these differences are highlighted in green and are called out with specific notes, indicating the specific deviation.
- For a description of data type elements, please refer to 2.3 – Data Types, which includes a reference to the Parent Guide definition of the data type.
- For details regarding data type field lengths, please refer to 2.1.3 – Lengths, in this document.
- No conformance information is provided for optional message elements. This includes length, usage, cardinality, value sets and descriptive information. Implementers who want to use optional message elements should refer to the HL7 Standard to determine how these optional message elements will be used.

1.4.1 – Message Element Attributes

The following table describes the various attributes used by this guide to document data type attribute tables, message structure attribute tables and segment attribute tables. Not all attributes apply to all attribute tables.

Table 1-1. Message Element Attributes

Attribute	Definition
Seq	Sequence of the elements as numbered in the HL7 message element. The Seq attribute applies to the data type attribute table and the segment attribute table.
Segment	Three-character code for the segment and the abstract syntax (*e.g.*, the square and curly braces): [XXX] • Optional { XXX } • Repeating XXX • Required [{ XXX }] • Optional and Repeating Note that for segment groups there is no segment code present, but the square and curly braces will still be present. The Segment attribute only applies to the Message attribute table.

Length	Maximum length of the element. Lengths are provided only for primitive data types. The length attribute apples to data type attribute tables and segment attribute tables. Lengths should be considered recommendations, not absolutes. The receiver can truncate fields, components and sub-components that are longer than the recommended length. The receiver should continue to process a message even when a field, component, or subcomponent length exceeds the maximum recommended length identified in this specification. See *HL7 2.5.1*, *Appendix C*, *Section C.3.3, Length* for additional documentation on lengths. The length attribute may contain a character indicating how the data may be truncated by a receiver. The truncation characters are defined as follows: • = Truncation not allowed • # Truncation allowed • No character indicates the truncation behavior is not defined.
DT	Data type used by this profile for HL7 element. The data type attribute applies to data type attribute tables and segment attribute tables.
Usage	Usage of the message element for this profile. Indicates whether the message element (segment, segment group, field, component, or subcomponent) is required, optional, or conditional in the corresponding message element. Usage applies to the message attribute table, data type attribute table and the segment attribute table. See section *HL7 2.5.1*, *Appendix C*, *Section C.3.1, Usage* for additional documentation on usage. In this implementation guide, usage has been divided by actor. This guide documents four separate actors: • Lab Result Sender • ELR Receiver • National Healthcare Safety Network (NHSN) Receiver • Lab to EHR Receiver Only the ELR Receiver actor is considered "Normative" in this guide. The other actors and the related profiles are provided as informational only. These non-normative usage columns have a grey background. See section *HL7 2.5.1*, *Appendix C*, *Section C.3.1, Usage* for additional documentation on various actors. Legal usage values are: **R –** Required. HL7 Definition: A conforming sending application shall populate all "R" elements with a non-empty value. Conforming receiving application shall process (save/print/archive/etc.) or ignore the information conveyed by

required elements. A conforming receiving application must not raise an error due to the presence of a required element, but may raise an error due to the absence of a required element. Any element designated as required in a standard HL7 message definition shall also be required in all HL7 message profiles of that standard message.

RE – Required, but can be empty.

HL7 Definition: The element may be missing from the message, but must be sent by the sending application if there is relevant data. A conforming sending application must be capable of providing all "RE" elements. If the conforming sending application knows the required values for the element, then it must send that element. If the conforming sending application does not know the required values, then that element will be omitted.

Receiving applications will be expected to process (save/print/archive/etc.) or ignore data contained in the element, but must be able to successfully process the message if the element is omitted (no error message should be generated because the element is missing).

O – Optional.

HL7 Definition: This code indicates that the Usage for this element has not yet been defined. A usage of 'Optional' may not be used in 'implementation' profiles (no-optionality profiles). Conformance may not be tested on an Optional field. Narrower profiles may be defined based on this profile, and may assign any usage code to the element.

C – Conditional.

HL7 Definition: This usage has an associated condition predicate (See section 2.B.7.6, "Condition predicate").

If the predicate is satisfied: A conformant sending application must always send the element. A conformant receiving application must process or ignore data in the element. It may raise an error if the element is not present.

If the predicate is NOT satisfied: A conformant sending application must NOT send the element. A conformant receiving application must NOT raise an error if the condition predicate is false and the element is not present, though it may raise an error if the element IS present.

CE – Conditional, but may be empty.

HL7 Definition: This usage has an associated condition predicate (See section 2.B.7.6, "Condition predicate").

If the predicate is satisfied: If the conforming sending application knows the required values for the element, then the application must send the element. If the conforming sending application does not know the values required for this element, then the element shall be omitted. The conforming sending application must be capable of knowing the element (when the predicate is true) for all 'CE' elements. If the element is present, the conformant receiving application shall process (display/print/archive/etc.) or ignore the values of that element. If the element is not present, the conformant receiving application shall not raise an error due to the presence or absence of the element.

	If the predicate is not satisfied: The conformant sending application shall not populate the element. The conformant receiving application may raise an application error if the element is present. **X –** Not used for this profile. HL7 Definition: For conformant sending applications, the element will not be sent. Conformant receiving applications may ignore the element if it is sent, or may raise an application error. **- –** The hyphen (-) Indicates the profile using the actor does not provide documentation of the structure containing the particular element or does not provide documentation of the particular element in the structure. For instance in a data type specification for CE, if a profile does not provide documentation of the CE data type, then each component of the data type would have a "-" for the usage for the actor associated with that profile.
Cardinality	Minimum and maximum number of times the element may appear: [0..0] Element never present. [0..1] Element may be omitted and can have, at most, one occurrence. [1..1] Element must have exactly one occurrence. [0..n] Element may be omitted or may repeat up to *n* times. [1..n] Element must appear at least once, and may repeat up to *n* times. [0..*] Element may be omitted or repeat an unlimited number of times. [1..*] Element must appear at least once, and may repeat unlimited number of times. [m..n] Element must appear at least *m*, and at most, *n* times. Cardinality applies only to message attribute tables and segment attribute tables. See section *HL7 2.5.1*, *Appendix C*, *Section C.3.2, Cardinality* for additional documentation on cardinality.
Value Set	The set of coded values to be used with the field. The value set attribute applies only to the data type attribute tables and the segment attribute tables. The value set may equate with an entire code system part of a code system, or codes drawn from multiple code systems. Note: Where a table constraint is indicated, or where HL7 Version 2.6 standards are pre-adopted, the constrained or specified HL7 table is included below the data type table.
Name	HL7 descriptor of the message element. Name applies to the message attribute table, data type attribute table and the segment attribute table.
Description/ Comments	Context and usage for the element. Description/Comments applies to the message attribute table, data type attribute table and the segment attribute table.

1.4.1.0 – Usage Conformance Testing Recommendations

The following table provides recommendations for testing the various usage codes described in Table 1-1. Message Element Attributes.

Table 1-2. Usage Conformance Testing Recommendations	
Usage	**Recommendation**
R – Required	Required elements must be present in a message instance with the following caveats: A required segment, which is contained within a segment group, is required only when the segment group is present in the message. For instance if the segment group is RE, then when the segment group is present, the required segments in that group must be present. A required field in a segment is required only when the segment itself is present in the message. For instance if the segment is CE (conditional or empty) and the conditional predicate is satisfied, then the segment is present in the message and the required fields must be present in the segment. A required component of a data type is required only when the field the data type is associated with is present in the message. Testing of a required element generally involves generating both a fully populated message instance as well as a minimally populated message instance. It may be necessary to generate specific test cases to handle separate segment groups, segments, etc. depending on the usage associated with these higher level elements within a message.
RE –Required, but can be empty	Since conformant senders must be able to show they can send these data, the primary mechanism for testing the RE usage would involve requiring the sender to transmit a "fully" populated message instance from their application. In this case, the expectation is that the message will be generated by the application, not handcrafted. The message would contain all data the sending application can populate in the message. This generally means the sender would be populating in their application all data elements being tested, including those that are optional in the application.
O – Optional	Conformance testing for optional elements would not normally be performed. If a particular implementation decides to use an optional element, it should create an implementation specific profile which further constrains this profile, making the optional element either required, required but may be empty, condition or conditional but may be empty, and then test the element in question based upon the assigned usage in that profile.
C – Conditional	Testing conditional elements generally means a special test case must be developed based upon the specific conditional rule or conditional predicate documented for the element.

CE – Conditional, but may be empty	Testing conditional but may be empty elements generally means a special test case must be developed based upon the specific conditional rule or conditional predicate documented for the element.
X – Not used for this profile	Testing this usage code usually involves looking at both fully populated and minimally populated messages. Note that the sending application may collect the data element in question, but it should not communicate that data element in message instances.

2.0 – Messaging Infrastructure

2.1 – Messaging Framework

2.1.1 – Delimiters

This profile supports the use of the normal HL7 delimiters. For ELR reporting to MDSS, it is required that implementers be able to send messages using the standard HL7 delimiters. Receivers must be capable of receiving any legal delimiters that are sent in a particular message instance.

This table is pre-adopted from the HL7 Version 2.6, which offers information regarding best practices. The intent has not changed from Version 2.5.1. Note that this implementation guide includes additional constraints and explanations for the entries.

Table 2-1. Delimiters

Delimiter	Required Value	Encoding Character Position	Description
Segment Terminator	<cr>	-	Terminates a segment record. This value cannot be changed by implementers. Additional Constraints and Explanation: The <cr> denotes the ASCII-013 carriage return character. There is a common misunderstanding that a linefeed character, or carriage return followed by a linefeed character, is allowed also. Neither HL7 nor this profile allows either of these two as part of the segment terminator. Only the ASCII-013 carriage return is allowed.
Field Separator	|	-	Separates two adjacent data fields within a segment. It also separates the segment ID from the first data field in each segment. Additional Constraints and Explanation: It is recommended that senders use ASCII-124, the vertical bar (|) character, as the field separator.
Component Separator	^	1	Separates adjacent components of data fields where allowed. Additional Constraints and Explanation: It is recommended that senders use ASCII-094, the caret (^) character, as the component separator.

Repetition Separator	~	2	Separates multiple occurrences of a field where allowed. Additional Constraints and Explanation: It is recommended that senders use ASCII-126, the tilde character (~), as the repetition separator.
Escape Character	\	3	Use the escape character with any field represented by an ST, TX or FT data type, or for use with the data (fifth) component of the ED data type. If no escape characters are used in a message, this character may be omitted. However, it must be present if subcomponents are used in the message. Best practice is always to include this character. Additional Constraints and Explanation: It is recommended that senders use ASCII-091, the backslash (\) character, as the escape character.
Subcomponent Separator	&	4	Separates adjacent subcomponents of data fields where allowed. If there are no subcomponents, this character may be omitted. Best practice is always to include this character. Additional Constraints and Explanation: It is recommended that senders use ASCII-038, the ampersand (&) character, as the subcomponent separator.

2.1.2 – Null Values in Fields versus Components

In HL7, a null value for a field is indicated by paired double quotes (|""|). The null value applies to the field as a whole, not to the components/subcomponents of the field. A null field value indicates that the receiver of the message should delete the corresponding set of information from the data store. For this implementation guide, null values within components and subcomponents are meaningless. For example, |lastname^firstname^""^^^^L| would be interpreted exactly as |lastname^firstname^^^^^L|. The components and subcomponents of a data type constitute a snapshot of the data. The set of data represented by the data type is handled as a complete set; therefore, using the null value to indicate a missing component or subcomponent is unnecessary.

2.1.3 – Lengths

In *HL7 Version 2.5*, HL7 assigned lengths to the components of data types, but did not standardize the lengths of the fields that use those data types. This guide pre-adopts the length rules from *HL7 Version 2.7*: Starting with v2.7, HL7 allows documentation of both a minimum and maximum length for an element.

In *HL7 Version 2.7* length is specified for primitive data types (i.e., those without components). Length is not specified for composite elements. For composite data types, the actual minimum and maximum lengths can be very difficult to determine due to the interdependencies on the component content, and the specification of actual lengths is not useful either. In general, this guide will adopt lengths from *HL7 Version 2.7.*

The concept of truncation is being pre-adopted from HL7 Version 2.7 as well, but only in regards to length documentation. The transmission of the truncation character in message data is not being pre-adopted.

See *HL7 2.5.1*, *Appendix C*, *Section C.3.3, Length* for additional documentation on lengths.

> *Note: In HL7 Version 2.5.1, the length of 65536 has a special meaning: For HL7, "If the maximum length needs to convey the notion of a Very Large Number, the number 65536 should be displayed to alert the user." In this implementation guide, fields or components with length 65536 should be understood as having no prescribed length. Receivers should be prepared to accept any size chunk of data carried in the field or component.*

2.2 – Use of Escape Sequences in Text Fields

Senders and receivers using this profile shall handle escape sequence processing as described in *HL7 Version 2.5.1*, *Chapter 2, Section 2.7.4 (Special Characters*). This requirement applies to the ST, TX and FT data types. Implementers shall not support escape sequences described in *Sections 2.7.2 (Escape sequences supporting multiple character sets), 2.7.3 (Highlighting), 2.7.5 (Hexadecimal), 2.7.6 (Formatted Text)* and *2.7.7 (Local).* This restriction applies to the TX and FT data types.

2.3 – Data Types

Additional explanation of each Data Type can be found in HL7 v2.5.1 – Final Standard, Chapter 2: "Control" or via the Public Health Information Network Vocabulary Access and Distribution System (PHIN VADS) website: https://phinvads.cdc.gov.

Table 2-2. Data Types

Data Type	Date Type Name	Lab Result Sender	ELR Receiver	HL7 Version 2.5.1 Implementation Guide: Electronic Laboratory Reporting to Public Health, Release 1 (US Realm)
CE	Coded element	U	X	Page 15
CNN	Composite ID Number and Name Simplified	U	U	Page 16
CQ	Composite Quantity with Units	U	U	Page 17
CWE	Coded with Exceptions	U	U	Page 18 (and Page 23 *for OBX-5 ONLY*)
CX	Extended Composite ID with Check Digit	U	U	Page 27

DR	Date/Time Range	U	U	Page 29
DT	Date	U	U	Page 29
DTM	Date/Time	U	U	Page 30
ED	Encapsulated Data	U	U	Page 30
EI	Entity Identifier	U	U	Page 34
EIP	Entity Identifier Pair	U	U	Page 35
ERL	Error Location	U	U	Page 35
FC	Financial Class	U	U	Page 37
FN	Family Name	U	U	Page 37
FT	Formatted Text Data	U	U	Page 38
HD	Hierarchic Designator	U	U	Page 39
ID	Coded Values for HL7 Tables	U	U	Page 40
IS	Coded value for User-Defined Tables	U	U	Page 40
MSG	Message Type	U	U	Page 41
NDL	Name with Date and Location	U	U	Page 41
NM	Numeric	U	U	Page 43
PL	Person Location	U	U	Page 43
PRL	Parent Result Link	U	U	Page 45
PT	Processing Type	U	U	Page 46
RP	Reference Pointer	U	U	Page 47
SAD	Street Address	U	U	Page 49
SI	Sequence ID	U	U	Page 50
SN	Structured Numeric	U	U	Page 50
ST	String	U	U	Page 52
TM	Time	U	U	Page 52
TS	Time Stamp	U	U	Page 53
TX	Text Data	U	U	Page 53
VID	Version Identifier	U	U	Page 54
XAD	Extended Address	U	U	Page 55
XCN	Extended Composite ID Number and Name	U	U	Page 57
XON	Extended Composite Name and ID Number for Organizations	U	U	Page 60
XPN	Extended Person Name	U	U	Page 61
XTN	Extended telecommunications number	U	U	Page 63

3.0 – Message Profile – Public Health Laboratory Messaging

3.1 – Use Case Model

Please see *HL7 Version 2.5.1 Implementation Guide: Electronic Laboratory Reporting to Public Health, Release 1 (US Realm)*, page 65.

3.2 – Dynamic Interaction Model

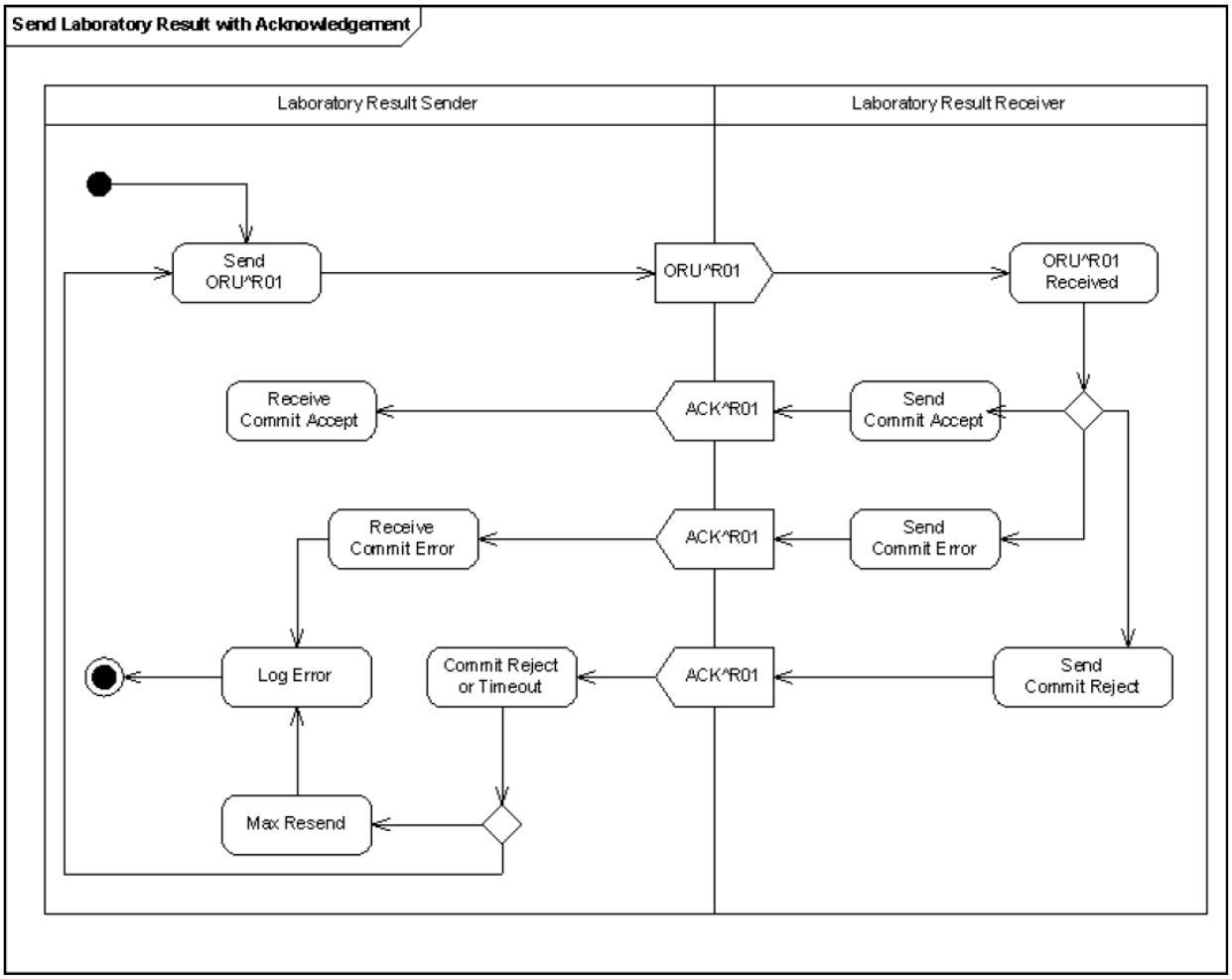

Figure 3-1. Activity Diagram for Send Laboratory Result Use Case – Acknowledgment Required

For additional Use Case Activity Diagrams (i.e., without acknowledgment and batch), please see *HL7 Version 2.5.1 Implementation Guide: Electronic Laboratory Reporting to Public Health, Release 1 (US Realm)*, page 69.

3.3 – Dynamic Definitions

Use of acknowledgements – For ELR messages reported to Public Health in the State of Michigan, MDHHS will always send acknowledgements.

Table 3-1. Dynamic Definition – Individual Transactions with Acknowledgments

Item	Value
Profile ID	PHLabReport-Ack
HL7 Version	2.5.1
Accept Acknowledgment	AL – Always
Application Acknowledgment	Refer to HL7 Table 0155 – Accept/Application Acknowledgment conditions in section 6.1.1.2 in *HL7 Version 2.5.1 Implementation Guide: Electronic Laboratory Reporting to Public Health, Release 1 (US Realm)*, page 180, for valid values.
Acknowledgment Mode	Immediate
Profile Type	Constrainable Profile
Message Types	ORU^R01^ORU_R01, ACK^R01^ACK
Encoding	ER7 (required) 2.5.1 XML (optional)

For additional dynamic message definitions that are not relevant to ELR reporting in Michigan, please see section 3.3 Dynamic Definitions in the *HL7 Version 2.5.1 Implementation Guide: Electronic Laboratory Reporting to Public Health, Release 1 (US Realm)*, page 70.

4.0 – Messages

The following sections detail the structure of each message, including segment name, usage, cardinality and description. See section 1.4.1 – Message Element Attributes for a description of the columns in the Abstract Message Syntax Tables.

4.1 ORU^R01^ORU_R01

The ORU^R01^ORU_R01 message is constrained for transmitting laboratory results from the testing source to Public Health.

The following table represents the complete list of segments accepted by MDHHS:

Table 4-1. ORU^R01^ORU_R01 Abstract Message Syntax

Segment in Standard	Name	Cardinality	Lab Result Sender Usage	ELR Receiver Usage	Description
MSH	Message Header	[1..1]	R	R	The message header (MSH) segment contains information describing how to parse and process the message. This includes identification of message delimiters, sender, receiver, message type, timestamp, etc.
[{SFT}]	Software Segment	[1..*]	O	O	Each HL7 aware application that touches the message on the way to the destination application must add a SFT segment for its application. For instance, PHIN MS is not HL7 aware and would not be expected to add an SFT. On the other hand, an integration engine is HL7 aware and would be expected to add an SFT. The first repeat (i.e., the Laboratory Result Sender actor) is required. Any other application that transforms the message must add an SFT segment for that application. Other applications that route or act as a conduit may add an SFT but are not required to do so.

Segment in Standard	Name	Cardinality	Lab Result Sender Usage	ELR Receiver Usage	Description
{	***PATIENT_RESULT Begin***	[1..*]	R	R	
[	***PATIENT Begin***	[1..1]	R	R	For public health reporting, the patient group is required.
PID	Patient Identification	[1..1]	R	R	The patient identification (PID) segment is used to provide basic demographics regarding the subject of the testing. The subject may be a person or animal.
[{NTE}]	Notes and Comments for PID	[0..*]	O	O	This notes and comments (NTE) segment should contain notes or comments pertaining to the patient identified in the PID segment. It should not contain order or result related comments. The Lab to EHR profile allows only a single NTE currently.
[{NK1}]	Next of Kin/Associated Parties	[0..*]	RE	RE	The next of kin (NK1) segment can be used to document the patient's next of kin, employer, guardian, etc. Particular jurisdictions may require the NK1 segment to contain parent/guardian information when reporting lead testing results for children. When reporting results of animal testing (for example testing animals for rabies) the NK1 segment can be used to identify the owner of the animal.
[{IN2}]	Insurance, Additional Information	[0..*]	CE	CE	Conditional Predicate: Required for messages reporting lead tests
[	***VISIT Begin***	[0..1]	RE	RE	
PV1	Patient Visit	[1..1]	O	O	HL7 requires that the patient visit (PV1) segment be present if the VISIT group is present.

Segment in Standard	Name	Cardinality	Lab Result Sender Usage	ELR Receiver Usage	Description
[PV2]	Patient Visit – Additional Information	[0..1]	O	O	
]	***VISIT End***				
]	***PATIENT End***				
{	***ORDER_OBSERVATION Begin***	[1..*]	R	R	The order group is required and can repeat. This means that multiple ordered tests may be performed on a specimen. Snapshot processing of the result message involves processing as a snapshot all the repeats of the ORDER_OBSERVATION group together as a group. This is especially important when dealing with parent/child results (such as cultures and sensitivities) which will span multiple ORDER_OBSERVATION groups. All these must be processed from both a message sender and message receiver perspective as a single snapshot.
[ORC]	Order Common	[0..1]	CE	CE	The common order (ORC) segment identifies basic information about the order for testing of the specimen. This segment includes identifiers of the order, who placed the order, when it was placed, what action to take regarding the order, etc. ELR Condition predicate: The first ORDER_OBSERVATION group must contain an ORC segment (containing ordering facility information) if no ordering provider information is present in OBR- 16 or OBR-17.

Segment in Standard	Name	Cardinality	Lab Result Sender Usage	ELR Receiver Usage	Description
OBR	Observation Request	[1..1]	R	R	The observation request (OBR) segment is used to capture information about one test being performed on the specimen. Most importantly, the OBR identifies the type of testing to be performed on the specimen, and ties that information to the order for the testing.
[{NTE}]	Notes and Comments for OBR	[0..*]	O	O	
[{	***TIMING_QTY Begin***	[0..*]	O	O	Although Timing/Quantity may be necessary for orders, it's not necessary for result reporting, particularly ELR.
TQ1	Timing/Quantity	[1..1]	O	O	
[{TQ2}]	Timing/Quantity Order Sequence	[0..1]	O	O	
}]	***TIMING_QTY End***				
[CTD]	Contact Data	[0..1]	O	O	

Segment in Standard	Name	Cardinality	Lab Result Sender Usage	ELR Receiver Usage	Description
[{	***OBSERVATION Begin***	[0..*]	CE	CE	Multiple results may be associated with an order. There will always be a single OBX in the results group. Snapshot processing: Since the OBX segment in *2.5.1* does not contain a unique instance identifier, it is assumed that the repeating observation group will contain a complete set of observations (OBXs) associated with the OBR. Where a single OBX is being updated, all the OBXs related to the OBR must accompany the updated OBX, i.e., a full snapshot is sent. Harmonized condition predicate: May be empty for OBR-25 Result statuses of "O," "I," "S" and "X"; otherwise, it is required.

Segment in Standard	Name	Cardinality	Lab Result Sender Usage	ELR Receiver Usage	Description
OBX	Observation related to OBR	[1..1]	R	R	The observation/result (OBX) segment contains information regarding a single observation (analyte) result. This includes identification of the specific type of observation, the result for the observation, when the observation was made, etc. For laboratory testing, the OBX is normally reporting the results of a test performed on a specimen, Because the ORU^R01^ORU_R01 message structure allows multiple specimens to be associated with a single OBR, there is no direct way to tell which specimen a particular OBX is associated with. There are other HL7 messages for laboratory results where this ambiguity does not= exist, but were not chosen for this implementation guide.
[{NTE}]	Notes and Comments	[0..*]	O	O	The notes and comment (NTE) segment may carry comments related to the result being reported in the OBX segment.
}]	***OBSERVATION End***				
[{FTI}]	Financial Transaction	[0..*]	O	O	

Segment in Standard	Name	Cardinality	Lab Result Sender Usage	ELR Receiver Usage	Description
[{	***SPECIMEN Begin***	[0..*]	CE	CE	The specimen group is conditionally required in the ORU and is used to carry specimen information that is no longer contained in the OBR segment. It also provides a place for the specimen number. Each specimen group documents a single sample. Note that for ELR, the message has been constrained to support a single SPECIMEN group per OBR, meaning only a single specimen can be associated with the OBR. ELR & NHSN Condition predicate: The specimen group is required for the parent Order_Observation Group in the message. ELR & NHSN Cardinality: These profiles currently support a single SPM segment. Per the harmonization strategy the receiver must pick from a message instance which repeat they will use for the profile.
SPM	Specimen Information related to OBR	[1..1]	R	R	The specimen information (SPM) segment describes the characteristics of a single sample. The SPM segment carries information regarding the type of specimen, where and how it was collected, who collected it, and some basic characteristics of the specimen.

Segment in Standard	Name	Cardinality	Lab Result Sender Usage	ELR Receiver Usage	Description
[{OBX}]	Observation related to Specimen	[0..*]	RE	RE	The Observation related to Specimen is generally used to report additional characteristics related to the specimen. It is not used to report the results of the requested testing identified in OBR-4 (Universal Service ID). The observations associated with the specimen are typically information that the ordering providing sends with the order. The laboratory forwards that information as part of the result message. One recommended value to report in the OBX related to Specimen is the age of patient at time of specimen collection. The appropriate LOINC code for this is 35659-2 (Age at specimen collection: TimeDif:Pt:^Patient:Qn). Other possible types of observations include: Was specimen sent out? Was it a specimen or isolate? Id of the specimen/isolate sent for testing. Where was the specimen sent? Reason for send out? Implementers will need to provide a list of expected observations associated with specimen.

Segment in Standard	Name	Cardinality	Lab Result Sender Usage	ELR Receiver Usage	Description
}]	***SPECIMEN End***				
}	***ORDER_ OBSERVATION End***				
}	***PATIENT_RESULT End***				

4.1.1 – Diagram of ORU^R01^ORU_R01 Message

The following diagram shows a simple view of the ORU^R01^ORU_R01 message structure. The green boxes represent the key segments in the HL7 result message and include the MSH, PID, OBR and OBX segments. The data found in these segments are key to the laboratory report. Data found in the other segments may be important but are not key to interpreting the message. Note that this diagram does not show repeating elements of the message (repeating groups or segments). It represents the way in which information in the message is related. Neither does this diagram capture the conditions on when some of the segments must be present in the message. For instance, there must be an ORC segment present in the message in the first repeat of the ORDER_OBSERVATION group.

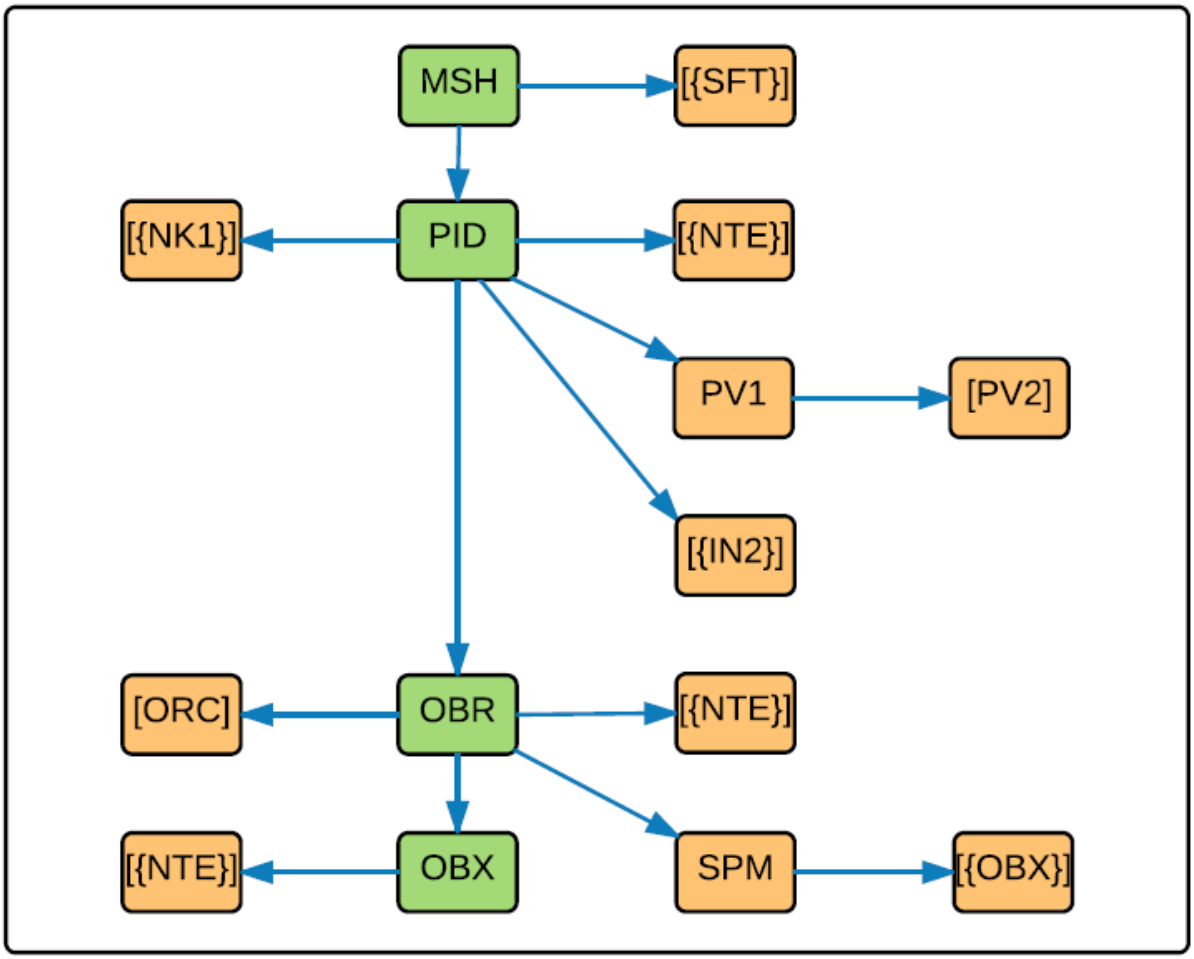

Figure 4-1. 2.5.1 ELR Message[1]

[1] Adapted from *HL7 Version 2.5.1 Implementation Guide: Electronic Lab Reporting to Public Health, Release 1 (US Realm)*, page 85.

Table 4-2. ACK^R01^ACK Abstract Message Syntax					
Segment in Standard	**Name**	**Cardinality**	**Lab Result Sender Usage**	**ELR Receiver Usage**	**Description**
MSH	Message Header	[1..1]	R	R	The message header (MSH) segment contains information describing how to parse and process the message. This includes identification of message delimiters, sender, receiver, message type, timestamp, etc.
[{SFT}]	Software Segment	[1..*]	R	R	Each HL7 aware application that touches the message on the way to the destination application must add a SFT segment for its application. For instance, PHIN MS is not HL7 aware and would not be expected to add an SFT. On the other hand, an integration engine is HL7 aware and would be expected to add an SFT. The first repeat (i.e., the originator) is required. Any other application that transforms the message must add an SFT segment for that application. Other applications that route or act as a conduit may add an SFT but are not required to do so.
MSA	Message Acknowledgment	[1..1]	R	R	
[{ERR}]	Error	[0..*]	CE	CE	ELR & Lab to EHR Condition predicate: Required when MSA 1 is not "AA" or "CA."

4.2 – Batch Protocol

Please see *HL7 Version 2.5.1 Implementation Guide: Electronic Laboratory Reporting to Public Health, Release 1 (US Realm)*, page 87.

5.0 – Segment and Field Descriptions

This messaging guide provides notes for supported fields. The following format is used in this document for listing and defining message segments and fields. First, the message segment use is defined and then a segment attribute table listing all fields defined in the segment is shown. See section 1.4.1 – Message Element Attributes for a description of the columns in the Segment Attribute Tables.

The following tables describe the columns headers for each element included in the segment and field descriptions:

Table 5-1. Segment and Field Element Descriptions

Element Column Header	Description	Element Column Header	Description
SEQ	Field Sequence Location	RPT/#	Whether repetition is permitted, and how many times
LEN	Length	TBL #	Table Number; a.k.a., Value / Code Set. See: 6.0 – Vocabulary Constraints
Data Type	See: 2.3 – Data Types	Name	HL7 Element Name
CARD	Cardinality	Description / Comments (From 2010 IG)	From: *HL7 Version 2.5.1 Implementation Guide: Electronic Laboratory Reporting to Public Health, Release 1 (US Realm)*
OPT	Optionality	MDHSS Description / Comments	Specifically for this Implementation Guide

5.1 – MSH: Message Header Segment

The Message Header Segment (MSH) contains information describing how to parse and process the message. This includes identification of message delimiters, sender, receiver, message type, timestamp, etc.

Table 5-2. Message Header Segment

SEQ	LEN	Data Type	CARD	OPT	RPT /#	TBL#	NAME	Description / Comments (From 2010 IG)	MDHHS Description / Comments
1	1..1	ST	[1..1]	R	1		Field Separator	Character to be used as the field separator for the rest of the message. Literal value: '|' [ASCII (124)].	
2	4..5	ST	[1..1]	R	1		Encoding Characters	Four characters, always appearing in the same order: |^~\&#|. Literal value: '^~\&#'.	Four characters, always appearing in the same order: |^~\&|. Literal value: '^~\&'. Note: '#' is not accepted and must not be sent.
3	227	HD	[1..1]	R	1	361	Sending Application	Field that may be used to identify the sending application uniquely for messaging purposes. For this field only, if all three components of the HD are valued, the first component defines a member in the set defined by the second and third components.	

SEQ	LEN	Data Type	CARD	OPT	RPT /#	TBL#	NAME	Description / Comments (From 2010 IG)	MDHHS Description / Comments
4	227	HD	[1..1]	R	1	362	Sending Facility	Field that uniquely identifies the facility associated with the application that plays the Laboratory Result Sender Actor (see section 3.1 Use Case Model) that sends the message. If acknowledgments are in use, this facility will receive any related acknowledgment message. Lab Result Sender Profile: For harmonization across all receiver profiles, use of an OID for this field is recommended. ELR Receiver Profile: For laboratories originating messages, the CLIA identifier is allowed for the Universal ID component of the HD data type. Non-laboratory facilities taking on the Laboratory Result Sender actor role will use an OID for this field.	Field that uniquely identifies the facility associated with the application that plays the Laboratory Result Sender Actor that sends the message. If acknowledgments are in use, this facility will receive any related acknowledgment message. Lab Result Sender Profile: Segment MSH.4.1 must contain a descriptor of the sender. Segment MSH.4.2 must contain the CLIA number for the sender. Segment MSH.4.3 must contain the term 'CLIA' Example: 'Hospital X^23D0000000^CLIA'

SEQ	LEN	Data Type	CARD	OPT	RPT /#	TBL#	NAME	Description / Comments (From 2010 IG)	MDHHS Description / Comments
5	227	HD	[1..1]	R	1	361	Receiving Application	Field that may be used to identify the receiving application uniquely for messaging purposes. For this field only, if all three components of the HD are valued, the first component defines a member in the set defined by the second and third components.	Field that is used to identify the receiving application uniquely for messaging purposes. Laboratory result sending actors must include all three components of the HD Data Type; all three are valued. The first component defines a member in the set defined by the second and third components. Literal values: 'MDSS'; *or*, 'MDSS^2.16.840.1.114222.4.3.2.2.3.161.1.6377^ISO'
6	227	HD	[1..1]	R	1	362	Receiving Facility	Field that uniquely identifies the facility for the application that plays the Laboratory Result Receiver Actor (see section 3.1 Use Case Model) and receives the message. If acknowledgments are in use, this facility originates any related acknowledgment message.	Field that uniquely identifies the facility for the application that plays the Laboratory Result Receiver Actor and receives the message. If acknowledgments are in use, this facility originates any related acknowledgment message. Literal values: 'MDSS'; *or*, 'MDSS^2.16.840.1.114222.4.3.2.2.3.161.1.6377^ISO'

SEQ	LEN	Data Type	CARD	OPT	RPT /#	TBL#	NAME	Description / Comments (From 2010 IG)	MDHHS Description / Comments
7	26	TS	[1..1]	R	1		Date/Time Of Message	Field containing the date/time the message was created by the sending system. Format: YYYYMMDDHHMMSS[.S[S[S[S]]]]+/-ZZZZ. Note that the time zone offset is required, and the minimum granularity is to the second, although more precise time stamps are allowed.	
8	1..40=	ST	[0..1]	O	1		Security		
9	15	MSG	[1..1]	R	1		Message Type	For the result message Literal Value: 'ORU^R01^ORU_R01'. For the acknowledgement message Literal Value: 'ACK^R01^ACK'.	

SEQ	LEN	Data Type	CARD	OPT	RPT /#	TBL#	NAME	Description / Comments (From 2010 IG)	MDHHS Description / Comments
10	1..199=	ST	[1..1]	R	1		Message Control ID	String that uniquely identifies the message instance from the sending application. Example formats for message control IDs include GUID, timestamp plus sequence number, OID plus sequence number or sequence number. The important point is that care must be taken to insure that the message control id is unique. The sending application (MSH-3) plus MSH-10 (message control id) needs to be globally unique.	
11	3	PT	[1..1]	R	1		Processing ID	Field that may be used to indicate the intent for processing the message, such as "T" (training,) "D" (debug,) or "P" (production.)	Field that may be used to indicate the intent for processing the message, such as "T" (testing) or "P" (production.). HL70103 All messages that are sent before production approval must contain 'T' for the Processing ID in the PT.1 sequence.
12	60	VID	[1..1]	R	1		Version ID	HL7 version number used to interpret format and content of the message. For this message, the version ID will always be Literal Value: 2.5.1. Note that receivers must examine MHS-21 (Message Profile Identifier) to understand which message profile the message instance conforms with.	

SEQ	LEN	Data Type	CARD	OPT	RPT /#	TBL#	NAME	Description / Comments (From 2010 IG)	MDHHS Description / Comments
13	15	NM	[0..1]	O	1		Sequence Number	Harmonized condition predicate: Required when MSH-21 profile id is PHLabReport-Ack or USLabReport, otherwise it may be empty or "NE".	
14	1..180=	ST	[0..1]	O	1		Continuation Pointer		
15	2..2	ID	[0..1]	CE	1	155	Accept Acknowledg-ment Type	Harmonized condition predicate: Required when MSH-21 profile id is PHLabReportAck or USLabReport, otherwise it may be empty or "NE".	
16	2..2	ID	[0..1]	CE	1	155	Application Acknowledg-ment Type	Harmonized condition predicate: Required when MSH-21 profile id is PHLabReportAck or USLabReport, otherwise it may be empty or "NE". Refer to *HL7 Table 0155 – Accept/Application Acknowledgment Conditions* for valid values.	
17	3..3	ID	[0..1]	O	1	399	Country Code	ELR Receiver - If empty, the default is 'USA'	
18	5..15	ID	[0..*]	O	*	211	Character Set		
19	250	CE	[0..1]	O	1		Principal Language Of Message		
20	3..13	ID	[0..1]	O	1	356	Alternate Character Set Handling Scheme		

SEQ	LEN	Data Type	CARD	OPT	RPT /#	TBL#	NAME	Description / Comments (From 2010 IG)	MDHHS Description / Comments
21	427	EI	[1..*]	R	*		Message Profile Identifier	Field used to reference or assert adherence to a message profile. Message profiles contain detailed explanations of grammar, syntax, and usage for a particular message or set of messages. This field is allowed to repeat. If multiple profiles are listed in this field, it is assumed the profiles aren't contradictory. If they were contradictory, this would be the basis for an error. The rules described by HL7 Chapter 2.1 about constraining profiles apply. The profile ID for the profile defined in this guide should appear as a Repeat. Other profile IDs may appear in the field, as well, in cases where more constrained profiles are created from this profile. An OID for this profile is available once it is assigned. Value is based on profile id from dynamic definition in section 3.3. NHSN Cardinality: The NHSN Profile currently supports a single repeat of this field.	

Example:

```
MSH|^~\&|Lab1^1234^CLIA| Hospital X^23D0000000^CLIA|MDSS^
2.16.840.1.114222.4.3.2.2.3.161.1.6377^ISO| MDSS^2.16.840.1.114222.4.3.2.2.3.161.1.6377^ISO
|20160223134754-0500||ORU^R01^ORU_R01|20160223134754000008|P^T|2.5.1|||NE|NE|USA|||PHLabReport-
Ack^^2.16.840.1.114222.4.10.3^ISO
```

5.2 – SFT: Software Segment

Table 5-3. Software Segment

SEQ	LEN	Data Type	CARD	OPT	RPT /#	TBL#	NAME	Description / Comments (From 2010 IG)	MDHHS Description / Comments
1		XON	[1..1]	R			Software Vendor Organization		
2	1..15#	ST	[1..1]	R			Software Certified Version or Release Number		
3	1..20#	ST	[1..1]	R			Software Product Name		
4	1..20#	ST	[1..1]	R			Software Binary ID		
5		TX	[0..1]	O			Software Product Information		
6		TS	[0..1]	RE			Software Install Date		

Example:

```
SFT|Level Seven Healthcare Software,
Inc.^L^^^^&2.16.840.1.113883.19.4.6^ISO^XX^^^1234|1.2|An Lab System|56734||20080817
```

5.3 – MSA: Acknowledgment Segment

The Message Response Segment (MSA) contains the information sent as acknowledgment to the order message received by a Laboratory Information System.

Important: The MSA segment is *ONLY* sent by the ELR Receiver to the Lab Result Sender; see: 3.2 – Dynamic Interaction Model. The Lab Result Sender must *not* include the MSA segment as part of the ELR message.

Table 5-4. Acknowledgment Segment

SEQ	LEN	Data Type	CARD	OPT	RPT /#	TBL#	NAME	Description / Comments (From 2010 IG)	MDHHS Description / Comments
1	2..2	ID	[1..1]	R		8	Acknowledgment Code	Acknowledgment code indicating receipt of message.	
2	1..199=	ST	[1..1]	R			Message Control ID	Identifier that enables the sending system to associate this response with the message for which it is intended. This value will be the MSH.10 message control ID from the message being acknowledged.	
3				X				Deprecated as of *HL7 Version 2.4.*	
4		NM	[0..1]	O			Expected Sequence Number		
5				X				Deprecated as of *HL7 Version 2.2*.	
6				X				Deprecated as of *HL7 Version 2.4.*	

Example:
```
MSA|CA|20070701132554000008
```

5.4 – ERR: Error Segment

The ERR segment is used to add error comments to acknowledgment messages.

Table 5-5. Error Segment

SEQ	LEN	Data Type	CARD	OPT	RPT/#	TBL#	NAME	Description / Comments (From 2010 IG)	MDHHS Description / Comments
1				X				Deprecated as of *HL7 Version 2.5*.	
2		ERL	[0..*]	O			Error Location		
3		CWE	[1..1]	R		357	HL7 Error Code	Identifies the HL7 (communications) error code.	
4	1..1	ID	[1..*]	R		516	Severity	Identifies the severity of an application error. Knowing if something is Error, Warning, or Information is intrinsic to how an application handles the content.	
5		CWE	[0..1]	O		533	Application Error Code	Note that Hl7 table 0533 has no suggested values. It is always a user defined table, and will generally contain locally defined codes.	
6	1..80#	ST	[1..10]	O			Application Error Parameter		
7	1..2048#	TX	[0..1]	RE			Diagnostic Information	Information that may be used by help desk or other support personnel to diagnose a problem.	
8	1..250#	TX	[0..1]	RE			User Message		
9				X				Not Supported.	
10				X				Not Supported.	
11				X				Not Supported.	
12		XTN	[0..*]	RE			Help Desk Contact Point		

Example:

```
ERR||OBR^1|100^Segment sequence error^HL70357|E|||Missing required OBR segment|Email help desk for
further information on this error||||^NET^Internet^helpdesk@hl7.org
```

5.5 – PID: Patient Identification Segment

The Patient Identification Segment (PID) is used to provide basic demographics regarding the subject of the testing. The subject may be a person or animal.

Table 5-6. Patient Identification Segment

SEQ	LEN	Data Type	CARD	OPT	RPT /#	TBL#	NAME	Description / Comments (From 2010 IG)	MDHHS Description / Comments
1	1..4	SI	[1..1]	R	1		Set ID - PID	Literal Value: '1'.	
2				X				Deprecated as of *HL7 Version 2.3.1*.	
3	250	CX	[1..*]	R	*		Patient Identifier List	Field used to convey all types of patient/person identifiers. This includes social security numbers, driver's license numbers, medical record numbers, etc. NHSN Cardinality: NHSN currently supports up to 4 patient identifiers.	Social Security Number is required for lead results for patients 16 years and older and for all HIV results
4				X				Deprecated as of *HL7 Version 2.3.1*.	

SEQ	LEN	Data Type	CARD	OPT	RPT /#	TBL#	NAME	Description / Comments (From 2010 IG)	MDHHS Description / Comments
5	250	XPN	[1..*]	R	*		Patient Name	Patient name or aliases. When the name of the patient is not known, a value must still be placed in this field since the field is required. In that case, HL7 recommends the following: |~^^^^^^U|. The "U" for the name type code in the second name indicates that it is unspecified. Since there may be no name components populated, this means there is no legal name, nor is there an alias. This guide will interpret this sequence to mean there is no patient name. NHSN Cardinality: NHSN currently supports up to 2 patient names.	
6	250	XPN	[0..1]	RE	*		Mother's Maiden Name	May be included for identification purposes. Name type code is constrained to the value "M."	

SEQ	LEN	Data Type	CARD	OPT	RPT /#	TBL#	NAME	Description / Comments (From 2010 IG)	MDHHS Description / Comments
7	26	TS	[0..1]	RE	1		Date/Time of Birth	Patient's date of birth. The time zone component is optional. Note that the granularity of the birth date may be important. For a newborn, birth date may be known down to the minute, while for adults it may be known only to the date. Birth date may be used by the lab to calculate an age for the patient, which may affect what normal ranges apply to particular test results. Format: YYYY[MM[DD[HH[MM[SS[.S[S[S[S]]]]]]]][+/-ZZZZ] Note: If a birth date is not provided in the PID, then the patient age at specimen collection must be reported as an observation associated with the specimen.	
8	1	IS	[0..1]	RE	1	1	Administrative Sex	Patient's gender.	
9				X				Deprecated as of *HL7 Version 2.4*.	
10	250	CE	[0..*]	RE	*	5	Race	One or more codes that broadly refer to the patient's race(s).	
11	250	XAD	[0..*]	RE	*		Patient Address	NHSN Cardinality: NHSN currently supports a single patient address.	
12				X				Deprecated as of *HL7 Version 2.3*.	
13	250	XTN	[0..*]	RE	*		Phone Number - Home		

SEQ	LEN	Data Type	CARD	OPT	RPT /#	TBL#	NAME	Description / Comments (From 2010 IG)	MDHHS Description / Comments
14	250	XTN	[0..*]	RE	*		Phone Number - Business		
15	250	CE	[0..*]	O	1	296	Primary Language	Need language for communication with the patient (i.e., phone, email, letter, etc.)	
16	250	CE	[0..1]	O	1	2	Marital Status		
17	250	CE	[0..1]	O	1	6	Religion		
18	250	CX	[0..1]	C	1		Patient Account Number	ELR: Use PID-3, with identifier type of 'AN'. NHSN Condition predicate: If PID-3 does not have an identifier with the AN type code, then this field is required and must contain an anonymous (type code = ANON) account number.	
19				X				Deprecated as of *HL7 Version 2.3.1*.	
20				X				Deprecated as of *HL7 Version 2.5*.	
21	250	CX	[0..*]	O	*		Mother's Identifier		
22	250	CE	[0..*]	RE	*	189	Ethnic Group	NHSN Cardinality: NHSN currently supports a single patient ethnic group.	
23	1..250#	ST	[0..1]	O	1		Birth Place		
24	1..1	ID	[0..1]	O	1	136	Multiple Birth Indicator		
25	1..2=	NM	[0..1]	O	1		Birth Order		
26	250	CE	[0..*]	O	*	171	Citizenship		

SEQ	LEN	Data Type	CARD	OPT	RPT /#	TBL#	NAME	Description / Comments (From 2010 IG)	MDHHS Description / Comments
27	250	CE	[0..1]	O	1	172	Veterans Military Status		
28				X				Deprecated as of *HL7 Version 2.4*.	
29	26	TS	[0..1]	RE	1		Patient Death Date and Time	Format: YYYY[MM[DD[HH[MM[SS[.S[S[S[S]]]]]]]][+/-ZZZZ]	
30	1..1	ID	[0..1]	RE	1	136	Patient Death Indicator	If PID-29 is valued, then this field should be populated with "Y" since the patient is known to be dead.	
31	1..1	ID	[0..1]	RE	1	136	Identity Unknown Indicator		
32	1..20=	IS	[0..*]	O	*	445	Identity Reliability Code		
33	26	TS	[0..1]	RE	1		Last Update Date/Time	Note: Used to indicate when demographics were last updated. Format: YYYY[MM[DD[HH[MM[SS[.S[S[S[S]]]]]]]][+/-ZZZZ]	
34	241	HD	[0..1]	CE	1		Last Update Facility	This is the facility that originated the demographic update. ELR: Condition predicate: If PID-33 is present this is required.	

SEQ	LEN	Data Type	CARD	OPT	RPT /#	TBL#	NAME	Description / Comments (From 2010 IG)	MDHHS Description / Comments
35	250	CE	[0..1]	RE	1	446	Species Code	Population of this field supports animal rabies testing as it relates to human rabies testing. This is a variant to HITSP where the field is not supported. If a constrained version of this guide includes support for Breed (PID-36) or Strain (PID-37), then this field would be required if Breed and or Strain is present.	
36	250	CE	[0..1]	O	1	447	Breed Code	If a constrained version of this guide includes support for Strain (PID-37), thenthis field would be required if Strain is present. ELR Note: The value set for PID-35, PHVS_Animal_CDC, is drawn from SNOMED CT and includes breed codes as well as codes for the species. SNOMED CT is now structured such that the selection of the specific breed also implies a specific species.	
37	1..80=	ST	[0..1]	O	1		Strain		
38	250	CE	[0..2]	O	1	429	Production Class Code		

SEQ	LEN	Data Type	CARD	OPT	RPT /#	TBL#	NAME	Description / Comments (From 2010 IG)	MDHHS Description / Comments
39	250	CWE	[0..*]	O	*	171	Tribal Citizenship	HL7 recommends using Bureau of Indian Affairs (BIA) Tribal Identity List. The following is a link to the current live list: http://www.usa.gov/Government/Tribal_Sites/index.shtml This is a link to the most recent official static list: http://edocket.access.gpo.gov/2008/E8- 6968.htm	

Example:

```
PID|1||36363636^^^MPI&2.16.840.1.113883.19.3.2.1&ISO^MR^A&2.16.840.1.113883.19.3.2.1&ISO~444333333
^^^&2.16.840.1.113883.4.1^ISO^SS||Everyman^Adam^A^^^^L^^^^^^^BS|Mum^Martha^M^^^^M|20050602|M||2106
-3^White^CDCREC^^^^04/24/2007|2222 Home Street^^Ann
Arbor^MI^99999^USA^H||^PRN^PH^^1^555^5552004|^WPN^PH^^1^955^5551009|eng^English^ISO6392^^^^3/29/20
07|M^Married^HL70002^^^^2.5.1||||||N^Not Hispanic or
Latino^HL70189^^^^2.5.1||||||||N|||200808151000-0700|Reliable^2.16.840.1.113883.19.3.1^ISO
```

5.6 – NK1: Next of Kin Segment

If the subject of the testing is something other than a person, the NK1 will document the person or organization responsible for or owning the subject. For patients who are persons, the NK1 documents the next of kin of the patient. This is particularly important for lead testing of minors, since the NK1 is used to document information about the parent or guardian. For animal patients, the NK1 documents the person or organization that owns or is responsible for the animal. This is where the employment information for the patient is documented.

Table 5-7. Next of Kin Segment

SEQ	LEN	Data Type	CARD	OPT	RPT /#	TBL#	NAME	Description / Comments (From 2010 IG)	MDHHS Description / Comments
1	1..4	SI	[1..1]	R	1		Set ID - NK1	For the first repeat of the NK1 segment, the sequence number shall be one (1), for the second repeat, the sequence number shall be two (2), etc.	
2	250	XPN	[0..*]	CE	*		NK Name	Name of the next of kin or associated party. Multiple names for the same entity are allowed, but the legal name must be sent in the first sequence. If the legal name is not sent, the repeat delimiter must be sent in the first sequence. ELR Condition predicate: If next of kin or associated party is a person use this field, otherwise, use field NK1-13.	
3	250	CE	[0..1]	RE	1	63	Relationship	Description of the relationship between the next of kin/related party and the patient. It is of particular importance when documenting the parent or guardian of a child patient or the owner of an animal patient.	Lead Results require Employer to be reported for all patients 16 years old and older. Use 'EMR' in this field to indicate field is for employer information

SEQ	LEN	Data Type	CARD	OPT	RPT /#	TBL#	NAME	Description / Comments (From 2010 IG)	MDHHS Description / Comments
4	250	XAD	[0..*]	RE	*		Address	Component that may contain the address of the next of kin/associated party.	
5	250	XTN	[0..*]	RE	*		Phone Number	Field that may contain the telephone number of the next of kin/associated party. Multiple phone numbers are allowed	
6				X				Not Supported.	
7				X				Not Supported.	
8				X				Not Supported.	
9				X				Not Supported.	
10				X				Not Supported.	
11				X				Not Supported.	
12				X				Not Supported.	
13	250	XON	[0..1]	CE	*		Organization Name - NK1	ELR Condition predicate: If next of kin or associated party is an organization use this field, otherwise, use field NK1-2.	For positive Lead Results in patients 16 years of age and older, enter Employer Name for and mark 'EMR' in NK1-3. Use for Next of Kin/Guardianship as an organization, enter Organization Name and appropriate value in NK1-3.
14				X				Not Supported.	
15				X				Not Supported.	
16				X				Not Supported.	
17				X				Not Supported.	
18				X				Not Supported.	
19				X				Not Supported.	

SEQ	LEN	Data Type	CARD	OPT	RPT /#	TBL#	NAME	Description / Comments (From 2010 IG)	MDHHS Description / Comments
20	250	CE	[0..1]	O	1	296	Primary Language	Need language for communication with the patient (i.e., phone, email, letter, etc.)	
21				X				Not Supported.	
22				X				Not Supported.	
23				X				Not Supported.	
24				X				Not Supported.	
25				X				Not Supported.	
26				X				Not Supported.	
27				X				Not Supported.	
28				X				Not Supported.	
29				X				Not Supported.	
30	250	XPN	[0..*]	CE	*		Contact Person's Name	ELR Condition predicate: Required if NK1-13 is populated.	
31	250	XTN	[0..*]	RE	*		Contact Person's Telephone Number		
32	250	XAD	[0..*]	RE	*		Contact Person's Address		
33				X				Not Supported.	
34				X				Not Supported.	
35				X				Not Supported.	
36				X				Not Supported.	
37				X				Not Supported.	
38				X				Not Supported.	
39				X				Not Supported.	

Example:
```
NK1|1|Mum^Martha^M^^^^L|MTH^Mother^HL70063^^^^2.5.1| 444 Home Street^Apt B^Ann
Arbor^MI^99999^USA^H|^PRN^PH^^1^555^5552006
```

5.7 – PV1: Patient Visit Information

This segment contains basic inpatient or outpatient encounter information.

Table 5-8. Patient Visit Information Segment

SEQ	LEN	Data Type	CARD	OPT	RPT /#	TBL#	NAME	Description / Comments (From 2010 IG)	MDHHS Description / Comments
1	1..4	SI	[1..1]	R	1		Set ID - PV1	Literal Value: '1'.	
2	1..20=	IS	[1..1]	R	1	4	Patient Class	A gross identification of the classification of patient's visit	
3	80	PL	[0..1]	CE	1		Assigned Patient Location	Lab to EHR Condition predicate: Required if PV1-2 is "inpatient."	
4	1..20=	IS	[0..1]	CE	1	7	Admission Type	Lab to EHR Condition predicate: Required if PV1-2 is "inpatient."	
5	250	CX	[0..1]	O	1		Preadmit Number		
6	80	PL	[0..1]	O	1		Prior Patient Location		
7	250	XCN	[0..*]	O	*	10	Attending Doctor		
8	250	XCN	[0..*]	O	*	10	Referring Doctor		
9	250	XCN	[0..*]	O	*	10	Consulting Doctor		

SEQ	LEN	Data Type	CARD	OPT	RPT /#	TBL#	NAME	Description / Comments (From 2010 IG)	MDHHS Description / Comments
10	1..20=	IS	[0..1]	RE	1	69	Hospital Service		
11	80	PL	[0..1]	O	1		Temporary Location		
12	1..20=	IS	[0..1]	O	1	87	Preadmit Test Indicator		
13				X				Not Supported.	
14	1..20=	IS	[0..1]	O	1	23	Admit Source		
15				X				Not Supported.	Deprecated with excepted circumstance.
16				X				Not Supported.	
17	250	XCN	[0..*]	O	*	10	Admitting Doctor		
18	1..20=	IS	[0..1]	O	1	18	Patient Type		
19	250	CX	[0..1]	RE	1		Visit Number		
20	50	FC	[0..*]	O	*	64	Financial Class		
21				X				Not Supported.	
22				X				Not Supported.	
23				X				Not Supported.	
24				X				Not Supported.	
25				X				Not Supported.	
26				X				Not Supported.	
27				X				Not Supported.	
28				X				Not Supported.	
29				X				Not Supported.	
30	8	DT	[0..1]	O	1		Transfer to Bad Debt Date		
31	1..20=	IS	[0..1]	O	1	21	Bad Debt Agency Code		

SEQ	LEN	Data Type	CARD	OPT	RPT /#	TBL#	NAME	Description / Comments (From 2010 IG)	MDHHS Description / Comments
32	1..12=	NM	[0..1]	O	1		Bad Debt Transfer Amount		
33	1..12=	NM	[0..1]	O	1		Bad Debt Recovery Amount		
34	1..20=	IS	[0..1]	O	1	111	Delete Account Indicator		
35	8	DT	[0..1]	O	1		Delete Account Date		
36	1..20=	IS	[0..1]	RE	1	112	Discharge Disposition	Disposition of the patient at discharge or once the visit is completed, for example, "Discharged to Home/Self-Care", "Expired", "Left Against Medical Advice". Uses Uniform Billing codes.	
37	47	DLD	[0..1]	O	1	113	Discharged to Location		
38	250	CE	[0..1]	O	1	114	Diet Type		
39	1..20=	IS	[0..1]	O	1	115	Servicing Facility		
40				X				Not supported.	
41	1..20=	IS	[0..1]	O	1	117	Account Status		
42	80	PL	[0..1]	O	1		Pending Location		
43	80	PL	[0..1]	O	1		Prior Temporary Location		
44	26	TS	[0..1]	RE	1		Admit Date/Time	Date and time patient arrived for services.	

SEQ	LEN	Data Type	CARD	OPT	RPT /#	TBL#	NAME	Description / Comments (From 2010 IG)	MDHHS Description / Comments
45	26	TS	[0..*]	RE	*		Discharge Date/Time	"Date and time patient services ended.	
46	1..12=	NM	[0..1]	O	1		Current Patient Balance		
47	1..12=	NM	[0..1]	O	1		Total Charges		
48	1..12=	NM	[0..1]	O	1		Total Adjustments		
49	1..12=	NM	[0..1]	O	1		Total Payments		
50	250	CX	[0..1]	O	1	203	Alternate Visit ID		
51	1..20=	IS	[0..1]	O	1	326	Visit Indicator		
52	250	XCN	[0..0]	O	*	10	Other Healthcare Provider		

Example:

```
PV1|1|O|4E^234^A^Good Health Hospital&2.16.840.1.113883.19.3.2.3&ISO^N^N^Building
1^4^Nursing
unit 4
East^1234&&2.16.840.1.113883.19.3.2.3&ISO^&2.16.840.1.113883.19.3.2.3&ISO|R||||||||||||||
||||||||||||||||||||||||||200808151000-0700|200808151200-0700
```

5.8 – PV2: Patient Visit, Additional Information Segment

The PV2 segment is a continuation of information contained on the PV1 segment. PV2 is an optional segment in MDSS. Therefore, no field or Segment is included in this Implementation Guide. If you would like more information on this segment, please visit Section 5.8 of *HL7 Version 2.5.1 Implementation Guide: Electronic Laboratory Reporting to Public Health, Release 1 (US Realm)*, page 115.

5.9 – ORC: Common Order Segment

The Common Order Segment (ORC) identifies basic information about the order for testing of the specimen. This segment includes identifiers for the order, who placed the order, when it was placed, what action to take regarding the order, etc.

Table 5-9. Common Order Segment

SEQ	LEN	Data Type	CARD	OPT	RPT /#	TBL#	NAME	Description / Comments (From 2010 IG)	MDHHS Description / Comments
1	2..2	ID	[1..1]	R	1	119	Order Control	Determiner of the function of the order segment. In the ORU^R01 this should be the literal value: "RE."	
2	22	EI	[0..1]	CE	1		Placer Order Number	ELR & Lab to EHR Condition predicate: If OBR-2 Placer Order Number is populated; this field must contain the same value as OBR-2.	

SEQ	LEN	Data Type	CARD	OPT	RPT /#	TBL#	NAME	Description / Comments (From 2010 IG)	MDHHS Description / Comments
3	22	EI	[1..1]	R	1		Filler Order Number	This field must contain the same value as OBR-3 Filler Order Number. Note: In the circumstance where some of the lab results are generated by the lab, but others are performed by a reference lab, the sending lab can choose what filler order number to use, but whatever is used, the sending lab is expected to be able to trace all the observations in the lab result back to the appropriate source lab based on the filler order number provided in ORC-3.	
4	22	EI	[0..1]	RE	1		Placer Group Number	The placer group number is used to identify a group of orders. In the laboratory setting this is commonly referred to as a "requisition number."	
5	2..2	ID	[0..1]	O	1	38	Order Status		
6	1..1	ID	[0..1]	O	1	121	Response Flag		
7				X				Deprecated as of *HL7 Version 2.5*.	
8	200	EIP	[0..1]	O	1		Parent Order		
9	26	TS	[0..1]	O	1		Date/Time of Transaction		
10	250	XCN	[0..*]	O	*		Entered By		
11	250	XCN	[0..*]	O	*		Verified By		
12	250	XCN	[0..*]	CE	*		Ordering Provider	ELR Condition predicate: If OBR.16 Ordering Provider is populated, this field will contain the same value.	

SEQ	LEN	Data Type	CARD	OPT	RPT /#	TBL#	NAME	Description / Comments (From 2010 IG)	MDHHS Description / Comments
13	80	PL	[0..1]	O	1		Enterer's Location		
14	250	XTN	[0..*]	CE	*		Call Back Phone Number	ELR Condition predicate: If OBR-17 Callback Phone Number is populated, this field will contain the same value. This should be a phone number associated with the original order placer. ELR Cardinality: ELR currently supports up to call back phone numbers.	
15	26	TS	[0..1]	O	1		Order Effective Date/Time		
16	250	CE	[0..1]	O	1		Order Control Code Reason		
17	250	CE	[0..1]	O	1		Entering Organization		
18	250	CE	[0..1]	O	1		Entering Device		
19	250	XCN	[0..*]	O	*		Action By		
20				X				Not supported.	
21	250	XON	[1..*]	R	*		Ordering Facility Name	ELR Cardinality: ELR supports a single ordering facility name.	
22	250	XAD	[1..*]	R	*		Ordering Facility Address	The address of the facility where the order was placed. ELR Cardinality: ELR supports a single ordering facility address.	

SEQ	LEN	Data Type	CARD	OPT	RPT /#	TBL#	NAME	Description / Comments (From 2010 IG)	MDHHS Description / Comments
23	250	XTN	[1..*]	R	*		Ordering Facility Phone Number		
24	250	XAD	[0..*]	RE	*		Ordering Provider Address	The address of the ordering provider.	
25	250	CWE	[0..1]	O	1		Order Status Modifier		
26				X				Not supported.	
27	26	TS	[0..1]	O	1		Filler's Expected Availability Date/Time		
28	250	CWE	[0..1]	O	1	177	Confidentiality Code		
29	250	CWE	[0..1]	O	1	482	Order Type		
30	250	CNE	[0..1]	O	1	483	Enterer Authorization Mode		
31	250	CWE	[0..1]	O	1		Parent Universal Service Identifier		

Example:

```
ORC|RE||CHEM9700122^MediLabCo-
Seattle^45D0470381^CLIA||||||||1234^Admit^Alan^A^III^Dr^^^&2.16.840.1.113883.19.4.6^ISO^L^^^EI^&2
.16.840.1.113883.19.4.6^ISO^^^^^^^^MD||^WPN^PH^^1^555^5551005||||||Level Seven Healthcare,
Inc.^L^^^^&2.16.840.1.113883.19.4.6^ISO^XX^^^1234|1005 Healthcare Drive^^Ann
Arbor^MI^99999^USA^B|^WPN^PH^^1^555^5553001|4444 Healthcare Drive^Suite 123^Ann
Arbor^MI^99999^USA^B
```

5.10 – OBR: Observation Request Segment

The Observation Request Segment (OBR) is used to capture information about one test being performed on the specimen. Most importantly, the OBR identifies the type of testing to be performed on the specimen and ties that information to the order for the testing.

Table 5-10. Observation Request Segment

SEQ	LEN	Data Type	CARD	OPT	RPT /#	TBL#	NAME	Description / Comments (From 2010 IG)	MDHHS Description / Comments
1	1..4	SI		R	1		Set ID - OBR	For the first repeat of the OBR segment, the sequence number shall be one (1), for the second repeat, the sequence number shall be two (2), etc.	
2	22	EI		RE	1		Placer Order Number	This identifier is assigned by the placer of the order being fulfilled by this result message. This identifier distinguishes the placer's order from all other orders created by the placer where an order is interpreted to be the testing identified in a single OBR segment. Normally, it is a type of system identifier assigned by the placer software application. The Placer Order Number and the Filler Order Number are essentially foreign keys exchanged between applications for uniquely identifying orders and the associated results across applications.	

SEQ	LEN	Data Type	CARD	OPT	RPT /#	TBL#	NAME	Description / Comments (From 2010 IG)	MDHHS Description / Comments
3	22	EI	[1..1]	R	1		Filler Order Number	Order number associated with the Filling Application. This number is assigned to the test by the organization performing the test. This field should not contain the accession number or specimen identifier for a specimen unless these identifiers meet the criteria for a filler order number. The specimen or accession identifier should be placed in SPM-2. The Filler Order Number identifies this order as distinct from all other orders being processed by this filler where an order is interpreted to be the testing identified in a single OBR segment. Normally, this is a type of system identifier assigned by the filler software application. The Filler Order Number, along with the Placer Order Number, is essentially foreign keys exchanged between applications for uniquely identifying orders and the associated results across applications. In messages containing multiple OBRs, each OBR must be identified by a unique Filler Order Number. This is critical for making parent/child results relationships work properly. Microbiology cultures and sensitivities are linked in this fashion in this profile. See Appendix A, Section A.4. Linking Parent and Child Results, of this document for more information on linking parent/child results.	

SEQ	LEN	Data Type	CARD	OPT	RPT /#	TBL#	NAME	Description / Comments (From 2010 IG)	MDHHS Description / Comments
4	250	CE	[1..1]	R	1		Universal Service Identifier	Identifier code for the requested observation/test/ battery. Strongly recommend Laboratory Order Value Set, which is based on LOINC.	
5				X				Deprecated as of *HL7 Version 2.3*.	
6				X				Deprecated as of *HL7 Version 2.3*.	
7		TS	[1..1]	R	1		Observation Date/Time	For specimen-based observations, the date/time the specimen was collected. A minimum of year, month and day must be provided when the actual date/time is known. For unknown collection date/time use "0000". If the SPM is sent, this field must contain the same value as the first component of SPM-17 Specimen Collection Date/Time. HL7 requires this field in an OBR in a result message. For OBXs related to this OBR and related to the testing of a specimen, OBX-14 (Date/Time of the Observation) shall contain the same value as this field. Format: YYYYMMDD[HH[MM[SS[.S[S[S[S]]]]]]]]+/-ZZZZ] except when reporting an unknown date of ‘0000”	

SEQ	LEN	Data Type	CARD	OPT	RPT /#	TBL#	NAME	Description / Comments (From 2010 IG)	MDHHS Description / Comments
8		TS	[0..1]	CE	1		Observation End Date/Time	For specimen-based observations where the specimen was collected over a period of time, this represents the end point in time when the specimen was collected. ELR Condition predicate: This field must contain the same value as the second component of SPM-17 Specimen Collection Date/Time.	
9				X				Deprecated as of *HL7 Version 2.5*.	
10	250	XCN	[0..*]	O	*		Collector Identifier		
11	1..1	ID	[0..1]	O	1	65	Specimen Action Code		
12	250	CE	[0..1]	O	1		Danger Code		
13	300	ST	[0..1]	RE	1		Relevant Clinical Information		This field is used for reporting of pregnancy status for Hepatitis B and C, Chlamydia, Gonorrhea, Syphilis, HIV, Listeriosis, Novel Influenza, Rubella, Measles, and Varicella. For reporting of a positive pregnancy status, the word "PRENATAL" will be sent in this field.
14				X				Deprecated as of *HL7 Version 2.5*.	
15				X				Deprecated as of *HL7 Version 2.5*.	

SEQ	LEN	Data Type	CARD	OPT	RPT /#	TBL#	NAME	Description / Comments (From 2010 IG)	MDHHS Description / Comments
16	250	XCN	[0..*]	RE	*		Ordering Provider	Identifier of the provider who ordered the testing being performed. The National Provider Identifier (NPI) may be used as the identifier. Note that ORC.12 Ordering Provider is constrained to contain the same value as this field.	
17	250	XTN	[0..2]	RE	*		Order Callback Phone Number		Phone number of provider ordering the test
18	1..199=	ST	[0..1]	O	1		Placer Field 1	This is the number the laboratory can call with questions regarding the order. This should be a phone number associated with the original order placer. Note that ORC.17 Call Back Phone Number is constrained to contain the same value as this field.	
19	1..199=	ST	[0..1]	O	1		Placer Field 2		
20	1..199=	ST	[0..1]	O	1		Filler Field 1		
21	1..199=	ST	[0..1]	O	1		Filler Field 2		
22	26	TS	[1..1]	R	1		Results Rpt/Status Chng - Date/Time	Required field in this message. Applies to the entire report. Receipt of a subsequent message with the same Filler Number and a different status in this field implies that processing may need to occur at the receiving application level to update a previous report. Format: YYYYMMDDHHMMSS.SS[…]+/-ZZZZ	
23	40	MOC	[0..1]	O	1		Charge to Practice		
24	2..3	ID	[0..1]	RE	1	74	Diagnostic Serv Sect ID		

SEQ	LEN	Data Type	CARD	OPT	RPT /#	TBL#	NAME	Description / Comments (From 2010 IG)	MDHHS Description / Comments
25	1..1	ID	[1..1]	R	1	123	Result Status		
26	400	PRL	[0..1]	CE	1		Parent Result	Field that, together with OBR-29 Parent, allows this result to be linked to a specific OBX segment associated with another OBR segment. See Appendix A, Section A.4. Linking Parent and Child Results, of this document for more information on linking parent/child results. Harmonized condition predicate: This field is required when linking child sensitivities to the parent culture.	
27				X				Deprecated as of *HL7 Version 2.5*.	
28	250	XCN	[0..*]	RE	*		Result Copies To		

SEQ	LEN	Data Type	CARD	OPT	RPT /#	TBL#	NAME	Description / Comments (From 2010 IG)	MDHHS Description / Comments
29	200	EIP	[0..1]	CE	1		Parent Number	Used to link this OBR with a parent OBR. Commonly used with microbiology messages to link a susceptibility result with the parent culture that identified the organism. For this linkage to work properly, the Placer Order Number and the Filler Order Number must uniquely identify the specific parent OBR. This means that the same Filler Number cannot be used to identify multiple OBRs. See Appendix A, Section A.4. Linking Parent and Child Results, of this document for more information on linking parent/child results. Harmonized condition predicate: This field is required if OBR-24 carries the value "MB" and OBR-4 indicates the ordered test is a culture and sensitivity. Parent/child linking should be used when the specimen type changes between the parent and child result (specimen and isolate/component specimen) or for reflex tests.	
30				X				Not supported.	
31	250	CE	[0..*]	RE	*		Reason for Study	ICD-10	
32	200	NDL	[0..1]	RE	1		Principal Result Interpreter	Used for pathology results.	
33	200	NDL	[0..*]	O	*		Assistant Result Interpreter		
34	200	NDL	[0..*]	O	*		Technician		
35	200	NDL	[0..*]	O	*		Transcriptionist		

SEQ	LEN	Data Type	CARD	OPT	RPT /#	TBL#	NAME	Description / Comments (From 2010 IG)	MDHHS Description / Comments
36	26	TS	[0..1]	O	1		Scheduled Date/Time		
37				X				Not supported.	
38				X				Not supported.	
39	250	CE	[0..*]	O	*		Collector's Comment *		
40				X				Not supported.	
41				X				Not supported.	
42				X				Not supported.	
43				X				Not supported.	
44	250	CE	[0..1]	O	1	88	Procedure Code		
45	250	CE	[0..*]	O	*	340	Procedure Code Modifier		
46	250	CE	[0..*]	O	*	411	Placer Supplemental Service Information		
47	250	CE	[0..*]	O	*	411	Filler Supplemental Service Information		
48	250	CWE	[0..1]	O	1	476	Medically Necessary Duplicate Procedure Reason		
49	2	IS	[0..1]	O	1	507	Result Handling		

SEQ	LEN	Data Type	CARD	OPT	RPT /#	TBL#	NAME	Description / Comments (From 2010 IG)	MDHHS Description / Comments
50	250	CWE	[0..1]	O	1		Parent Universal Service Identifier	This field has been retained as optional to allow ELR implementations with Labs that do not support unique placer or filler order numbers. In some cases the labs filler order number equates with a requisition number that in conjunction with the Universal Service ID will constitute a unique identifier for the order. For parent/child result linking to work in these situations, the sending lab will need to populate not only OBR-29, but this field also. The receiving application will need to use both OBR-29 and this field to properly link these results. We note that such implementations will not be conformant with this guide, but optional support for this field has been retained so that states may still communicate with these labs in a non-conformant manner.	

Example:

```
OBR|1|23456^EHR^2.16.840.1.113883.19.3.2.3^ISO|9700123^Lab^2.16.840.1.113883.19.3.1.6^ISO
|50545-3^Bacterial susceptibility panel:-:Pt:Isolate:OrdQn:MIC^LN^^^^2.26|||200808151030-
0700|||||anemia|||1234^Admit^Alan^A^III^Dr^^^&2.16.840.1.113883.19.4.6^ISO^L^^^EI^&2.16.
840.1.113883.19.4.6^ISO^^^^^^^^MD|^WPN^PH^^1^555^5551005|||||2008081830-0700|||F|625-
4&Bacteria identified:Prid:Pt:Stool:Nom:Culture&LN^1^Campylobacter
jejuni|||23456&EHR&2.16.840.1.113883.19.3.2.3&ISO^9700122&Lab&2.16.840.1.113883.19.3.1.6&
ISO||787.91^DIARRHEA^I9CDX^^^^07/09/2008|1235&Slide&Stan&S&&Dr&MD&&DOC&2.16.840.1.113883.
19.4.6&ISO
```

5.11 – TQ1: Timing/Quantity Segment

The TQ1 segment is used to specify the timing of events and actions such as those that occur in order management and scheduling systems. MDSS does not currently process or read the PV2, if included. Therefore, no field or Segment is included in this Implementation Guide. If you would like more information on this segment, please visit Section 5.8 of *HL7 Version 2.5.1 Implementation Guide: Electronic Laboratory Reporting to Public Health, Release 1 (US Realm)*, page 135.

5.12 – OBX: Observation/Result Segment

The Observation/Result Segment (OBX) contains information regarding a single observation related to a single test (OBR) or specimen (SPM). This includes identification of the specific type of observation, the result for the observation, when the observation was made, etc.

Table 5-11. Observation/Result Segment

SEQ	LEN	Data Type	CARD	OPT	RPT/#	TBL#	NAME	Description / Comments (From 2010 IG)	MDHHS Description / Comments
1	1..4	SI	[1..1]	R	1		Set ID - OBX	For the first repeat of the OBX segment, the sequence number shall be one (1), for the second repeat, the sequence number shall be two (2), etc.	
2	2..3	ID	[0..1]	CE	125	125	Value Type	This field identifies the data type used for OBX-5. Conditional statement: If OBX-5 is populated, OBX-2 is required. See Section 5.8.1, HL7 Table 0125 for the data types that will be supported for this field and OBX-5.	
1	1..4	SI	[1..1]	R	1		Set ID - OBX	For the first repeat of the OBX segment, the sequence number shall be one (1), for the second repeat, the sequence number shall be two (2), etc.	
4	1..20=	ST	[0..1]	CE	1		Observation Sub-ID	Harmonized condition predicate: Required if there is more than one OBX with the same OBX-3 Observation Identifier associated with the same OBR. Normally, this field is populated with a number, but text values may be used also.	

SEQ	LEN	Data Type	CARD	OPT	RPT/#	TBL#	NAME	Description / Comments (From 2010 IG)	MDHHS Description / Comments
5	99999	VARIES - See: 5.12.1 – Observation Identifiers, Observation Values, Interpreta-tions and Comments	[0..1]	CE	*		Observation Value	Field that documents each specific, allowed data type. See Section 6.1.1.1, HL7 Table 0125 for the data types that will be supported for this field. Harmonized Condition predicate: Either OBX-5 or OBX-8 (Abnormal flags) must be present in the message except if OBX-11 is 'X", result cannot be obtained.	
6	250	CE	[0..1]	CE	1		Units	UCUM® is an HL7-approved code system and shall be used for units as described in the appropriate HITSP Interoperability Specification. The UCUM unit of measure for values without a unit of measure is "1". Harmonized Conditional statement: If the data type in OBX 2 is "NM" or "SN" and the OBX-11 observation result status is not 'X' then this field is required.	
7	1..60=	ST	[0..1]	RE	1		References Range	Interpretation range that applies to the value reported in OBX-5. It should provide enough information to understand the abnormal flags reported in OBX-8. ELR Note-It is not appropriate to send the reference range for a result in an associated NTE segment. It would be appropriate to send information amplifying the reference range provided in this field in an NTE associated with this OBX.	

SEQ	LEN	Data Type	CARD	OPT	RPT/#	TBL#	NAME	Description / Comments (From 2010 IG)	MDHHS Description / Comments
8	1..20=	IS	[0..*]	CE	*	78	Abnormal Flags	Indicator of the normalcy of the result found in OBX-5. Cardinality indicates the possible need for multiple abnormal flags, as in the following example: Example: Hemoglobin has a normal range of 12-16 Initial result (reported in a separate ORU message based on testing an earlier specimen): HGB = 15.9 (results normal) Current result (in this OBX based on current specimen): HGB = 11.9 abnormality: (L) below low normal and a (D) significant change down (delta > 3). In this example, OBX-8 would be set to |L~D|. Microbiology example: Ceftazidime susceptibility (LOINC 133-9) value = |<=^1|, units = ug/ml, Abnormal flag = S ELR-Note that this IG is adopting HL70078 form 2.7. NHSN has pre-adopted the CWE data type for this field from 2.7. ELR Condition predicate: Required if OBX-5 is empty the OBX-11 observation result status is not 'X', result cannot be obtained. NHSN Cardinality: NHSN supports a single Abnormal Flag.	
9	1..5#	NM	[0..1]	O	1		Probability		

SEQ	LEN	Data Type	CARD	OPT	RPT/#	TBL#	NAME	Description / Comments (From 2010 IG)	MDHHS Description / Comments
10	1..2	ID	[0..1]	O	*	80	Nature of Abnormal Test		
11	1..1	ID	[1..1]	R	1	85	Observation Result Status	Status of the observation result.	
12	26	TS	[0..1]	O	1		Effective Date of Reference Range		
13	20=	ST	[0..1]	O	1		User Defined Access Checks		

SEQ	LEN	Data Type	CARD	OPT	RPT/#	TBL#	NAME	Description / Comments (From 2010 IG)	MDHHS Description / Comments
14	26	TS	[0..1]	CE	1		Date/Time of the Observation	The date/time of observation is intended to carry the clinically relevant time of the observation. For specimen-based laboratory reporting, the specimen collection date and time. For observations carried out directly on a patient for instance, such as a blood pressure, the time the observation was performed also happens to be the clinically relevant time of the observation. The date/time the testing was performed should be reported in OBX-19. ELR Condition predicate: For observations related to the testing of a specimen, OBX-14 (Date/Time of the Observation) shall contain specimen collection time and will be the same value as OBR-7 and SPM- 17.1. Format: YYYYMMDD[HH[MM[SS[.S[S[S[S]]]]]]]+/-ZZZZ] except when reporting an unknown date of ‘0000”. Note that in the past; OBX-14 was often used to carry the time of testing a specimen, even though HL7 clearly stated it should be the specimen collection date/time in that case. In this IG, the time the testing was performed will be carried in OBX-19, and OBX-14 will be used for its HL7 intended purpose. Previous version of HL7 did not contain OBX-19.	

15	250	CE	[0..1]	O	1		Producer's ID	If populated the field must identify the same performing organization as that identified in OBX-23 (Performing Organization Name).	
16	250	XCN	[0..*]	O	*		Responsible Observer		
17	250	CE	[0..*]	RE	*		Observation Method	If populated the field must identify the same performing organization as that identified in OBX-23 (Performing Organization Name).Method of testing by the laboratory. If the LOINC code in OBX-3 is methodless, this field shall be populated. Sometimes the method may be extrapolated from the local test codes. NHSN Cardinality: NHSN supports a single Observation Method.	
18	22	EI	[0..*]	O	*		Equipment Instance Identifier		
19	26	TS	[0..1]	RE	1		Date/Time of the Analysis	Time at which the testing was performed. Note that in the past; OBX-14 was often used to carry the time of testing a specimen, even though HL7 clearly stated it should be the specimen collection date/time in that case. In this IG, the time the testing was performed will be carried in OBX-19, and OBX-14 will be used for its HL7 intended purpose.	
20				X				Not supported.	
21				X				Not supported.	
22				X				Not supported.	

SEQ	LEN	Data Type	CARD	OPT	RPT/#	TBL#	NAME	Description / Comments (From 2010 IG)	MDHHS Description / Comments
23	567	XON	[1..1]	R	1		Performing Organization Name	The information for producer ID is recorded as an XON data type. For laboratories, this field specifies the laboratory that produced the test result described in this OBX segment. This information supports CLIA regulations in the US. For producing laboratories that are CLIA-certified, the CLIA identifiershould be used for the organizationidentifier (component 10).	
24	631	XAD	[1..1]	R	1		Performing Organization Address	Address of the laboratory that actually performed the test when used as areference laboratory.	
25	3002	XCN	[0..1]	RE	1		Performing Organization Medical Director	Name of the Medical Director of the reference laboratory. Required when OBX-24 indicates the performing lab is in a jurisdiction that requires this information.	

Example:

```
OBX|1|CWE|625-4^Bacteria identified:Prid:Pt:Stool:Nom:Culture^LN^^^^2.26|1|66543000^Campylobacter
jejuni^SCT^^^^January 2007||||||P|||200906041458|||0086^Bacterial identification^OBSMETHOD^^^^501-
20080815||200906051700||||GHH Lab^L^^^^CLIA&2.16.840.1.113883.19.4.6&ISO^XX^^^1236|3434 Industrial
Loop^^Ann Arbor^MI^99999^USA^B|9876543^Slide^Stan^S^^^^^NPPES&2.16.840.1.113883.19.4.6&ISO^L^^^NPI
```

5.12.1 – Observation Identifiers, Observation Values, Interpretations and Comments

Laboratory results fall into several broad categories or types of results. The first type of result is a quantitative measure of some property of a specimen and is typically numerical in nature. Often these numeric results are also associated with some sort of interpretation, typically in terms of the normality or abnormality of the measured quantity in relationship to a reference range or normal range. Another type of result is a qualitative result related to the testing of a specimen. This is typically coded or textual in nature. Qualitative results may actually be interpretations of more detailed quantitative measurement. Finally, both quantitative and qualitative results may have comments associated with them. These comments may provide additional clarification, information regarding how the result was obtained, etc.

How a particular result should be reported using the OBX segment above depends upon what is being used as an observation identifier for OBX-3. This guide assumes that LOINC is normally being used for the identification of observations. LOINC identifiers can easily be classified as quantitative or qualitative. The LOINC scale property QN (quantitative) indicates that the LOINC identifier is quantitative. All other LOINC identifiers can be treated as qualitative for the purpose of this discussion. Those OBX's associated with quantitative LOINC identifiers should be using OBX-5 with either the NM (numeric), SN (structured numeric), TS (timestamp), DT (date) or TM (time) data types. These quantitative results can be accompanied by an interpretation. Coded interpretations should be reported using OBX-8 (abnormal flags) when the values have been drawn from HL7 table 0078. When a coded interpretation is sent, or when a textual interpretation is sent, a second OBX using a non-quantitative LOINC identifier should be used.

So far, we have been talking about actual clinical findings, whether they are quantitative or qualitative. Often, additional clarifying documentation is sent along with the clinical findings. These should be handled as comments, conveyed in an NTE segment(s) following the OBX in question. Comments typically fall into the following categories:

- Comments about how a clinical finding was reached;
- Clarification regarding the meaning of a clinical finding;
- Additional information not directly related to the clinical finding such as contact information for the lab, disclaimers, etc.; or,
- Most canned, or boiler plate text associated with a result falls into the comment category.

Table 5-12. OBX-5 Clarification									
Testing Situation Discussion	**OBX.2 Observation Type**			**OBX.3 Observation Identifier: LOINC part = scale**	**OBX.5 Observation Value**	**OBX.6 Units**	**OBX.7 Reference Range**	**OBX.8 Abnormal Flags**	**NTE Segment**
Conveys imbedded object (ED) or pointer to object (RP)	ED	RP		Varies	Object Pointer or imbedded object		[empty]	[empty]	
Time like quantitative result with interpretation	TS	TM	DT	QN	Timestamp, Time, or Date				
Conveys observation and interpretation				NAR				May be Populated with codes from HL7 table 78	May be populated with comments, not clinical findings.
Conveys observation and interpretation	FT	TX	ST	MULTI	Text	[empty]	May Be Populated		

Testing Situation Discussion	OBX.2 Observation Type	OBX.3 Observation Identifier: LOINC part = scale	OBX.5 Observation Value	OBX.6 Units	OBX.7 Reference Range	OBX.8 Abnormal Flags	NTE Segment
Conveys observation and interpretation		NOM	Coded observation. SNOMED CT shall be used when code exists; otherwise it's a local code.				
Conveys ordinal value and interpretation	CWE		Ordinal as a code. SNOMED CT shall be used when code exists; otherwise it's a local code. Sending ordinals as codes is the preferred ELR approach.		May Be Populated		
Conveys ordinal value and interpretation		ORD	Ordinal as structured numeric	[empty]	Required		
Numerical intervals, ratios, inequalities	SN		Structured Numeric			May be Populated with codes from HL7 table 78	May be populated with comments, not clinical findings.
Numeric result along with interpretation	NM	QN	Number	UCUM Units Required	May Be Populated		

5.13 – SPM: Specimen Segment

The Specimen Information Segment (SPM) describes the characteristics of a single sample. The SPM segment carries information regarding the type of specimen, where and how it was collected, who collected it and some basic characteristics of the specimen.

Table 5-13. Specimen Segment

SEQ	LEN	Data Type	CARD	OPT	RPT /#	TBL #	NAME	Description / Comments (From 2010 IG)	MDHHS Description / Comments
1	1..4	SI	[1..1]	R	1		Set ID _ SPM	Name of the Medical Director of the reference laboratory. Required when OBX-24 indicates the performing lab is in a jurisdiction that requires this information. For the first repeat of the SPM segment, the sequence number shall be one (1), for the second repeat, the sequence number shall be two (2), etc.	
2	80	EIP	[1..1]	R	1		Specimen ID	Unique identifier for the specimen as referenced by the Placer application, the Filler application, or both. Note that the specimen id is not the same thing as the placer/filler order number. Order numbers identify the specific test to be performed on a specimen. A particular specimen may be associated with multiple orders (and multiple placer/filler order numbers). The specimen id may be the same as an accession number, depending on how the particular lab assigns accession numbers.	
3	80	EIP	[0..*]	O	*		Specimen Parent IDs		

4	250	CWE	[1..1]	R	1	487	Specimen Type	Description of the precise nature of the entity that is the source material for the observation.	

SEQ	LEN	Data Type	CARD	OPT	RPT /#	TBL #	NAME	Description / Comments (From 2010 IG)	MDHHS Description / Comments
5	250	CWE	[0..*]	RE	*	541	Specimen Type Modifier	Allows sending qualifiers for a SNOMED CT term from a single axis. Only used if SPM-4 is a SNOMED code.	
6	250	CWE	[0..*]	RE	*	371	Specimen Additives		
7	250	CWE	[0..1]	RE	1	488	Specimen Collection Method	Method used to collect the specimen.	
8	250	CWE	[0..1]	CE	1		Specimen Source Site	Source from which the specimen was obtained. For environmental samples, this may describe the location of the source of the specimen. For biological samples, it may represent the anatomical site from which the specimen was collected.	Completion of this field is required (R) for all Blood Lead Level results, indicating whether the source site was venous or capillary. For all other messages, this field is RE.
9	250	CWE	[0..*]	RE	*	542	Specimen Source Site Modifier	Modifier or qualifier for the specimen source site (SPM-8). Allows sending qualifiers for a SNOMED CT term from a single axis. Only used if SPM-8 is a SNOMED code. This allows use of post-coordinated terminologies for specimen source.	
10	250	CWE	[0..1]	O	1	543	Specimen Collection Site		
11	250	CWE	[0..*]	RE	*	369	Specimen Role		
12	20	CQ	[0..1]	RE	1		Specimen Collection Amount	Amount of sample collected. This can be reported as a volume or a weight/mass.	

SEQ	LEN	Data Type	CARD	OPT	RPT /#	TBL #	NAME	Description / Comments (From 2010 IG)	MDHHS Description / Comments
13	1..6=	NM	[0..1]	O	1		Grouped Specimen Count		
14	250	ST	[0..*]	O	*		Specimen Description	NHSN Cardinality: NHSN supports a single specimen description.	
15	250	CWE	[0..*]	O	*	376	Specimen Handling Code		
16	250	CWE	[0..*]	O	*	489	Specimen Risk Code		
17	26	DR	[1..1]	R	1		Specimen Collection Date/Time	Time range over which the sample was collected, as opposed to the time the sample collection device was recovered. The first component of the date range must match OBR-7 Observation Date/Time. The second component must match OBR-8 Observation End Date/Time. For OBXs reporting observations based on this specimen, OBX-14 should contain the same value as component 1 of this field. A minimum of year, month and day must be provided when the actual date/time is known. For unknown collection date/time use "0000". Format:|YYYYMMDD[HH[MM[SS[.S[S[S[S]]]]]]][+/-ZZZZ]^YYYYMMDD[HH[MM[SS[.S[S[S[S]]]]]]][+/-ZZZZ]|	

SEQ	LEN	Data Type	CARD	OPT	RPT /#	TBL #	NAME	Description / Comments (From 2010 IG)	MDHHS Description / Comments
18	26	TS	[1..1]	R	1		Specimen Received Date/Time	Time the specimen was received at the diagnostic service. The actual time that is recorded is based on how specimen receipt is managed, and may correspond to the time the sample is logged in. Format: YYYYMMDD[HH[MM[SS[.S[S[S[S]]]]]]][+/-ZZZZ]	
19	26	TS	[0..1]	O	1		Specimen Expiration Date/Time		
20	1..1	ID	[0..1]	O	1	136	Specimen Availability		
21	250	CWE	[0..*]	RE	*	490	Specimen Reject Reason		
22	250	CWE	[0..1]	O	1	491	Specimen Quality		
23	250	CWE	[0..1]	O	1	492	Specimen Appropriateness		
24	250	CWE	[0..*]	O	*	493	Specimen Condition		
25	20	CQ	[0..1]	O	1		Specimen Current Quantity		
26	4	NM	[0..1]	O	1		Number of Specimen Containers		

SEQ	LEN	Data Type	CARD	OPT	RPT /#	TBL #	NAME	Description / Comments (From 2010 IG)	MDHHS Description / Comments
27	250	CWE	[0..1]	O	1		Container Type		
28	250	CWE	[0..1]	O	1	544	Container Condition		
29	250	CWE	[0..1]	O	1	494	Specimen Child Role		

Example:

```
SPM|1|23456&EHR&2.16.840.1.113883.19.3.2.3&ISO^9700122&Lab&2.16.840.1.113883.19.3.1.6&ISO||WB^Whol
e Blood^HL70487^^^^^2.5.1||THYO^Thyoglycollate broth^HL70371^^^^2.5.1|BCAE^Blood Culture, Aerobic
Bottle^HL70488^^^^2.5.1|49852007^Structure of median cubital vein (body
structure)^SCT^^^^20080731|||P^Patient^HL60369^^^^2.5.1|2.0^mL&MilliLiter [SI Volume
Units]&UCUM&&&&1.6|||||200808151030-0700|200808151100-0700
```

5.14 – NTE: Notes and Comments Segment

The Notes and Comments Segment (NTE) is used to convey additional comments regarding the associated segment. The NTE segment is not intended for automatic processing. The contents of the NTE segment are primarily intended for human use. Automated process should not be based upon the contents of NTE-3 (Comment); rather the content of that field should be displayed to humans.

Table 5-14. Notes and Comments Segment

SEQ	LEN	Data Type	CARD	OPT	RPT /#	TBL #	NAME	Description / Comments (From 2010 IG)	MDHHS Description / Comments
1	4	SI	[1..1]	R	1		Set ID - NTE	For the first repeat of the NTE segment, the sequence number shall be one (1), for the second repeat, the sequence number shall be two (2), etc.: YYYYMMDD[HH[MM[SS[.S[S[S[S]]]]]]][+/-ZZZZ]	
2	1..1	ID	[0..1]	RE	1	105	Source of Comment		
3	65536	FT	[1..*]	R	*		Comment	Comment contained in the segment. NHSN Cardinality: NHSN supports a single comment.	
4	250	CE	[0..1]	RE	1	364	Comment Type		

Example:

```
NTE|1|L|Comment goes here. It can be a very long comment.|RE^Remark^HL70364^^^^2.5.1
```

6.0 – Vocabulary Constraints

Table 6-1. Value Set/Code System Summary shows the various value sets/code systems used in this IG. It also provides information about the source of the vocabulary and an identifier for the vocabulary. The name found in the Value Set/Code System Name column corresponds with the value set identified in the Value Set column of the data type, found in 2.3 – Data Types, and the segment attribute tables, found in 5.0 – Segment and Field Descriptions .

Table 6-1. Value Set / Code System Summary

Value Set/Code System Name	Value Set/Code System Source	Value Set/Code System Identifier	Description
Body Site Value Set	HITSP C-80,20090708 V1.1	2.16.840.1.113883.3.88.12.3221.8.9	PHIN VADS Value Set. Code System: PHVS_BodySite_HITSP Specimen Source Site. Identify the body site for injury, specimen, injection and finding. Shall contain a value descending from the SNOMED CT® Anatomical Structure (91723000) hierarchy. This indicates the anatomical site. https://phinvads.cdc.gov/vads/ViewValueSet.action?id=F84E6B60-D54F-4766-961E-D24ED1648BBA
Country Value Set	HITSP C-80,20090708 V1.1 (Subsumed)	2.16.840.1.113883.3.88.12.80.63 (Deprecated OID)	This identifies the ISO, Alpha-3, Officially Assigned codes for the representation of names of countries, territories and areas of geographical interest. https://www.iso.org/obp/ui/#search Also available from PHIN VADS as: PHVS_Country_ISO_3166-1 Also known as HL7 Table 0399.

Value Set/Code System Name	Value Set/Code System Source	Value Set/Code System Identifier	Description
ELR Reportable Laboratory Observation Identifier Value Set	TBD	TBD	This value set is determined by specific ELR implementations. The specific reportable laboratory observation identifiers are often state or jurisdiction specific.
HL7 V3 Observation Method	HL7 Version 3.0	2.16.840.1.113883.5.84 (code system)	Observation Method Also available from PHIN VADS as: PHVS_LabTestMethods_CDC
HL70001 – Administrative Sex	HL7 Version 2.5.1	2.16.840.1.113883.12.1 (code system)	PHIN VADS Value Set. Code System: PH_AdministrativeSex_HL7_2x https://phinvads.cdc.gov/vads/ViewCodeSystem.action?id=2.16.840.1.113883.12.1
HL70002 – Marital Status	HL7 Version 2.5.1	2.16.840.1.113883.12.2 (code system)	PHIN VADS Value Set. Code System: PH_MaritalStatus_HL7_2x http://phinvads.cdc.gov/vads/ViewCodeSystem.action?id=2.16.840.1.113883.12.2#
HL70003 – Event Type	HL7 Version 2.5.1	2.16.840.1.113883.12.3 (code system)	PHIN VADS Value Set. Code System: PH_EventType_HL7_2x http://phinvads.cdc.gov/vads/ViewCodeSystem.action?id=2.16.840.1.113883.12.3
HL70004 – Patient Class	HL7 Version 2.5.1	2.16.840.1.113883.12.4 (code system)	PHIN VADS Value Set. Code System: PH_PatientClass_HL7_2x https://phinvads.cdc.gov/vads/ViewCodeSystem.action?id=2.16.840.1.113883.12.4

Value Set/Code System Name	Value Set/Code System Source	Value Set/Code System Identifier	Description
HL70005 – Race Category	HL7 Version 2.5.1	2.16.840.1.113883.6.238 (code system)	PHIN VADS Value Set. Code System: PH_RaceAndEthnicity_CDC https://phinvads.cdc.gov/vads/ViewCodeSystem.action?id=2.16.840.1.113883.6.238
HL70006 – Religion	HL7 Version 2.5.1	2.16.840.1.113883.12.6 (code system)	PHIN VADS Value Set. Code System: PH_Religion_HL7_2x http://phinvads.cdc.gov/vads/ViewCodeSystem.action?id=2.16.840.1.113883.12.6
HL70007 – Admission Type	HL7 Version 2.5.1	2.16.840.1.113883.12.7 (code system)	PHIN VADS Value Set. Code System: PH_AdmissionType_HL7_2s http://phinvads.cdc.gov/vads/ViewCodeSystem.action?id=2.16.840.1.113883.12.7
HL70008 – Acknowledgment Code	HL7 Version 2.5.1	2.16.840.1.113883.12.8 (code system)	PHIN VADS Value Set. Code System: PH_AcknowledgmentCode_HL7_2x http://phinvads.cdc.gov/vads/ViewCodeSystem.action?id=2.16.840.1.113883.12.8
HL70009 – Ambulatory Status	HL7 Version 2.5.1	N/A	HL7 v2.5.1 - Final Standard, Appendix A: Data Definition Tables, Pages A-35 and A-36
HL70023 – Admit Source	HL7 Version 2.5.1	2.16.840.1.113883.12.23 (code system)	PHIN VADS Value Set. Code System: PH_AdmitSource_HL7_2x https://phinvads.cdc.gov/vads/ViewCodeSystem.action?id=2.16.840.1.113883.12.23
HL70038 – Order Status	HL7 Version 2.5.1	2.16.840.1.113883.12.38 (code system)	PHIN VADS Value Set. Code System: PH_OrderStatus_HL7_2x https://phinvads.cdc.gov/vads/ViewCodeSystem.action?id=2.16.840.1.113883.12.38

Value Set/Code System Name	Value Set/Code System Source	Value Set/Code System Identifier	Description
HL70061 – Check Digit Scheme	HL7 Version 2.5.1	2.16.840.1.113883.12.61 (code system)	PHIN VADS Value Set. Code System: PH_CheckDigitScheme_HL7_2x https://phinvads.cdc.gov/vads/ViewCodeSystem.action?id=2.16.840.1.113883.12.61
HL70063 – Relationship	HL7 Version 2.5.1	2.16.840.1.113883.12.63 (code system)	PHIN VADS Value Set. Code System: PH_Relationship_HL7_2x https://phinvads.cdc.gov/vads/ViewCodeSystem.action?id=2.16.840.1.113883.12.63
HL70065 – Specimen Action Code	HL7 Version 2.5.1	2.16.840.1.113883.12.65 (code system)	PHIN VADS Value Set. Code System: PH_SpecimenActionCode_HL7_2x https://phinvads.cdc.gov/vads/ViewCodeSystem.action?id=2.16.840.1.113883.12.65
HL70069 – Hospital Service	HL7 Version 2.5.1	N/A	HL7 v2.5.1 - Final Standard, Appendix A: Data Definition Tables, Pages A-39 and A-40
HL70074 – Diagnostic Service Section ID	HL7 Version 2.5.1	2.16.840.1.113883.12.74 (code system)	PHIN VADS Value Set. Code System: PH_DiagnosticServiceSectionID_HL7_2x https://phinvads.cdc.gov/vads/ViewCodeSystem.action?id=2.16.840.1.113883.12.74
HL70076 – Message Type	HL7 Version 2.5.1	2.16.840.1.113883.12.76 (code system)	PHIN VADS Value Set. Code System: PH_MessageType_HL7_2x https://phinvads.cdc.gov/vads/ViewCodeSystem.action?id=2.16.840.1.113883.12.76

Value Set/Code System Name	Value Set/Code System Source	Value Set/Code System Identifier	Description
HL70078 – Abnormal Flags	HL7 Version 2.5.1	2.16.840.1.113883.12.78 (code system)	PHIN VADS Value Set. Code System: PH_AbnormalFlag_HL7_2x https://phinvads.cdc.gov/vads/ViewCodeSystem.action?id=2.16.840.1.113883.12.78
HL70080 – Nature of Abnormal Testing	HL7 Version 2.5.1	2.16.840.1.113883.12.80 (code system)	PHIN VADS Value Set. Code System: PH_NatureOfAbnormalTesting_HL7_2x https://phinvads.cdc.gov/vads/ViewCodeSystem.action?id=2.16.840.1.113883.12.80
HL70085 – Observation Result Status	HL7 Version 2.5.1	2.16.840.1.113883.12.85 (code system)	PHIN VADS Value Set. Code System: PH_ObservationResultStatus_HL7_2x https://phinvads.cdc.gov/vads/ViewCodeSystem.action?id=2.16.840.1.113883.12.85
HL70092 – Re-Admission Indicator	HL7 Version 2.5.1	N/A	HL7 v2.5.1 - Final Standard, Appendix A: Data Definition Tables, Page A-55
HL70103 – Processing ID	HL7 Version 2.5.1	2.16.840.1.113883.12.103 (code system)	PHIN VADS Value Set. Code System: PH_ProcessingID_HL7_2x https://phinvads.cdc.gov/vads/ViewCodeSystem.action?id=2.16.840.1.113883.12.103
HL70104 – Version ID	HL7 Version 2.5.1	2.16.840.1.113883.12.104 (code system)	PHIN VADS Value Set. Code System: PH_VersionID_HL7_2x https://phinvads.cdc.gov/vads/ViewCodeSystem.action?id=2.16.840.1.113883.12.104

Value Set/Code System Name	Value Set/Code System Source	Value Set/Code System Identifier	Description
HL70105 – Source of Comment	HL7 Version 2.5.1	2.16.840.1.113883.12.105 (code system)	PHIN VADS Value Set. Code System: PH_SourceOfComment_HL7_2x https://phinvads.cdc.gov/vads/ViewCodeSystem.action?id=2.16.840.1.113883.12.105
HL70112 – Discharge Disposition	HL7 Version 2.5.1	2.16.840.1.113883.12.112 (code system)	PHIN VADS Value Set. Code System: PH_DischargeDisposition_HL7_2x https://phinvads.cdc.gov/vads/ViewCodeSystem.action?id=2.16.840.1.113883.12.112
HL70119 – Order Control Codes	HL7 Version 2.5.1	2.16.840.1.113883.12.119 (code system)	PHIN VADS Value Set. Code System: PH_OrderControlCodes_HL7_2x https://phinvads.cdc.gov/vads/ViewCodeSystem.action?id=2.16.840.1.113883.12.119
HL70121 – Response Flag	HL7 Version 2.5.1	2.16.840.1.113883.12.121 (code system)	PHIN VADS Value Set. Code System: PH_ResponseFlag_HL7_2x https://phinvads.cdc.gov/vads/ViewCodeSystem.action?id=2.16.840.1.113883.12.121
HL70123 – Results Status	HL7 Version 2.5.1	2.16.840.1.113883.12.123 (code system)	PHIN VADS Value Set. Code System: PH_ResultStatus_HL7_2x https://phinvads.cdc.gov/vads/ViewCodeSystem.action?id=2.16.840.1.113883.12.123

Value Set/Code System Name	Value Set/Code System Source	Value Set/Code System Identifier	Description
HL70125 – Value Type	HL7 Version 2.5.1	2.16.840.1.113883.12.125 (code system)	PHIN VADS Value Set. Code System: PH_ValueType_HL7_2x https://phinvads.cdc.gov/vads/ViewCodeSystem.action?id=2.16.840.1.113883.12.125
HL70131 – Contact Code	HL7 Version 2.5.1	2.16.840.1.113883.12.131 (code system)	PHIN VADS Value Set. Code System: PH_ContactRole_HL7_2x https://phinvads.cdc.gov/vads/ViewCodeSystem.action?id=2.16.840.1.113883.12.131
HL70136 – Yes/No Indicator	HL7 Version 2.5.1	2.16.840.1.113883.12.136 (code system)	PHIN VADS Value Set. Code System: PH_YesNo_HL7_2x https://phinvads.cdc.gov/vads/ViewCodeSystem.action?id=2.16.840.1.113883.12.136
HL70137 – Mail Claim Party	HL7 Version 2.5.1	N/A	HL7 v2.5.1 - Final Standard, Appendix A: Data Definition Tables, Pages A-61 and A-62
HL70140 – Military Service	HL7 Version 2.5.1	N/A	HL7 v2.5.1 - Final Standard, Appendix A: Data Definition Tables, Page A-62
HL70141 – Military Rank/Grade	HL7 Version 2.5.1	N/A	HL7 v2.5.1 - Final Standard, Appendix A: Data Definition Tables, Page A-62
HL70142 – Military Status	HL7 Version 2.5.1	N/A	HL7 v2.5.1 - Final Standard, Appendix A: Data Definition Tables, Page A-62
HL70144 – Eligibility Source	HL7 Version 2.5.1	N/A	HL7 v2.5.1 - Final Standard, Appendix A: Data Definition Tables, Page A-62
HL70145 – Room Type	HL7 Version 2.5.1	N/A	HL7 v2.5.1 - Final Standard, Appendix A: Data Definition Tables, Pages A-62 and A-63

Value Set/Code System Name	Value Set/Code System Source	Value Set/Code System Identifier	Description
HL70146 – Amount Type	HL7 Version 2.5.1	N/A	HL7 v2.5.1 - Final Standard, Appendix A: Data Definition Tables, Page A-63
HL70148 – Money or Percentage Indicator	HL7 Version 2.5.1	N/A	HL7 v2.5.1 - Final Standard, Appendix A: Data Definition Tables, Page A-63
HL70155 – Accept/Application Acknowledgment Condition	HL7 Version 2.5.1	2.16.840.1.113883.12.155 (code system)	PHIN VADS Value Set. Code System: PH_AcceptApplicationAcknowledgmentConditions_HL7_2x https://phinvads.cdc.gov/vads/ViewCodeSystem.action?id=2.16.840.1.113883.12.155
HL70163 – Body Site	HL7 Version 2.5.1	2.16.840.1.113883.12.163 (code system)	PHIN VADS Value Set. Code System: PH_BodySite_HL7_2x https://phinvads.cdc.gov/vads/ViewCodeSystem.action?id=2.16.840.1.113883.12.163
HL70177 – Confidentiality Code	HL7 Version 2.5.1	2.16.840.1.113883.12.177 (code system)	PHIN VADS Value Set. Code System: PH_ConfidentialityCode_HL7_2x https://phinvads.cdc.gov/vads/ViewCodeSystem.action?id=2.16.840.1.113883.12.177
HL70189 – Ethnic Group	HL7 Version 2.5.1	2.16.840.1.113883.12.189 (code system)	PHIN VADS Value Set. Code System: PH_EthnicGroup_HL7_2x https://phinvads.cdc.gov/vads/ViewCodeSystem.action?id=2.16.840.1.113883.12.189

Value Set/Code System Name	Value Set/Code System Source	Value Set/Code System Identifier	Description
HL70190 – Address Type	HL7 Version 2.5.1	2.16.840.1.113883.12.190 (code system)	PHIN VADS Value Set. Code System: PH_AddressType_HL7_2x https://phinvads.cdc.gov/vads/ViewCodeSystem.action?id=2.16.840.1.113883.12.190
HL70191 – Type of Referenced Data	HL7 Version 2.5.1	2.16.840.1.113883.12.191 (code system)	PHIN VADS Value Set. Code System: PH_TypeOfReferencedData_HL7_2x https://phinvads.cdc.gov/vads/ViewCodeSystem.action?id=2.16.840.1.113883.12.191
HL70200 – Name Type	HL7 Version 2.5.1	2.16.840.1.114222.4.11.7378 (code system)	PHIN VADS Value Set. Code System: PHVS_HL70200NameTypeCode_NCHS https://phinvads.cdc.gov/vads/ViewValueSet.action?id=00A0816B-79C3-46E8-A2F4-E8E8CBBD97F2
HL70201 – Telecommunication Use Code	HL7 Version 2.5.1	2.16.840.1.113883.12.201 (code system)	PHIN VADS Value Set. Code System: PH_TelecommunicationUseCode_HL7_2x https://phinvads.cdc.gov/vads/ViewCodeSystem.action?id=2.16.840.1.113883.12.201
HL70202 – Telecommunication Equipment Type	HL7 Version 2.5.1	2.16.840.1.113883.12.202 (code system)	PHIN VADS Value Set. Code System: PH_TelecommunicationEquipmentType_HL7_2x https://phinvads.cdc.gov/vads/ViewCodeSystem.action?id=2.16.840.1.113883.12.202

Value Set/Code System Name	Value Set/Code System Source	Value Set/Code System Identifier	Description
HL70203 – Identifier Type	HL7 Version 2.5.1	2.16.840.1.114222.4.11.7382 (code system)	PHIN VADS Value Set. Code System: PHVS_DeathReportingIdentifierType_HL70203_NCHS https://phinvads.cdc.gov/vads/ViewValueSet.action?id=5B97374C-32BC-4648-8626-5DCDA0F84A8A
HL70204 – Organizational Name Type	HL7 Version 2.5.1	2.16.840.1.113883.12.204 (code system)	PHIN VADS Value Set. Code System: PH_OrganizationalNameType_HL7_2x https://phinvads.cdc.gov/vads/ViewCodeSystem.action?id=2.16.840.1.113883.12.204
HL70207 – Processing Mode	HL7 Version 2.5.1	2.16.840.1.113883.12.207 (code system)	PHIN VADS Value Set. Code System: PH_ProcessingMode_HL7_2x https://phinvads.cdc.gov/vads/ViewCodeSystem.action?id=2.16.840.1.113883.12.207
HL70211 – Alternative Character Sets	HL7 Version 2.5.1	2.16.840.1.113883.12.211 (code system)	PHIN VADS Value Set. Code System: PH_AlternateCharacterSets_HL7_2x https://phinvads.cdc.gov/vads/ViewCodeSystem.action?id=2.16.840.1.113883.12.211
HL70215 – Publicity Code	HL7 Version 2.5.1	2.16.840.1.113883.12.215 (code system)	PHIN VADS Value Set. Code System: PH_PublicityCode_HL7_2x https://phinvads.cdc.gov/vads/ViewCodeSystem.action?id=2.16.840.1.113883.12.215
HL70220 – Living Arrangement	HL7 Version 2.5.1	N/A	HL7 v2.5.1 - Final Standard, Appendix A: Data Definition Tables, Page A-78

Value Set/Code System Name	Value Set/Code System Source	Value Set/Code System Identifier	Description
HL70223 – Living Dependency	HL7 Version 2.5.1	N/A	HL7 v2.5.1 - Final Standard, Appendix A: Data Definition Tables, Page A-78
HL70231 – Student Status	HL7 Version 2.5.1	N/A	HL7 v2.5.1 - Final Standard, Appendix A: Data Definition Tables, Page A-80
HL70232 – Insurance Company Contact Reason	HL7 Version 2.5.1	N/A	HL7 v2.5.1 - Final Standard, Appendix A: Data Definition Tables, Pages A-80 and A-81
HL70291 – Subtype of Referenced Data	HL7 Version 2.5.1	N/A	HL7 v2.5.1 - Final Standard, Appendix A: Data Definition Tables, Page A-91
HL70299 – Encoding	HL7 Version 2.5.1	2.16.840.1.113883.12.299 (code system)	PHIN VADS Value Set. Code System: PH_Encoding_HL7_2x https://phinvads.cdc.gov/vads/ViewCodeSystem.action?id=2.16.840.1.113883.12.299
HL70301 – Universal ID Type	HL7 Version 2.5.1	2.16.840.1.113883.12.301 (code system)	PHIN VADS Value Set. Code System: PH_UniversalIdType_HL7_2x https://phinvads.cdc.gov/vads/ViewCodeSystem.action?id=2.16.840.1.113883.12.301
HL70305 – Person Location Type	HL7 Version 2.5.1	N/A	HL7 v2.5.1 - Final Standard, Appendix A: Data Definition Tables, Page A-100
HL70311 – Job Status	HL7 Version 2.5.1	N/A	HL7 v2.5.1 - Final Standard, Appendix A: Data Definition Tables, Page A-100

Value Set/Code System Name	Value Set/Code System Source	Value Set/Code System Identifier	Description
HL70326 – Visit Indicator	HL7 Version 2.5.1	2.16.840.1.113883.12.326 (code system)	PHIN VADS Value Set. Code System: PH_VisitIndicator_HL7_2x https://phinvads.cdc.gov/vads/ViewCodeSystem.action?id=2.16.840.1.113883.12.326
HL70335 – Repeat Pattern	HL7 Version 2.5.1	N/A	HL7 v2.5.1 - Final Standard, Appendix A: Data Definition Tables, Pages A-102 and A-103
HL70344 – Patient's Relationship to Insured	HL7 Version 2.5.1	N/A	HL7 v2.5.1 - Final Standard, Appendix A: Data Definition Tables, Pages A-104 and A-105
HL70354 – Message Structure	HL7 Version 2.5.1	2.16.840.1.113883.12.354 (code system)	PHIN VADS Value Set. Code System: PH_MessageStructure_HL7_2x https://phinvads.cdc.gov/vads/ViewCodeSystem.action?id=2.16.840.1.113883.12.354
HL70356 – Alternate Character Set Handling Scheme	HL7 Version 2.5.1	2.16.840.1.113883.12.356 (code system)	PHIN VADS Value Set. Code System: PH_AlternateCharacterSetHandlingScheme_HL7_2x https://phinvads.cdc.gov/vads/ViewCodeSystem.action?id=2.16.840.1.113883.12.356
HL70357 – Message Error Condition Codes	HL7 Version 2.5.1	2.16.840.1.113883.12.357 (code system)	PHIN VADS Value Set. Code System: PH_MessageErrorConditionCodes_HL7_2x https://phinvads.cdc.gov/vads/ViewCodeSystem.action?id=2.16.840.1.113883.12.357

Value Set/Code System Name	Value Set/Code System Source	Value Set/Code System Identifier	Description
HL70360 – Degree/License/ Certificate	HL7 Version 2.5.1	2.16.840.1.113883.12.360 (code system)	PHIN VADS Value Set. Code System: PH_DegreeLicenseCertificate_HL7_2x https://phinvads.cdc.gov/vads/ViewCodeSystem.action?id=2.16.840.1.113883.12.360
HL70364 – Comment Type	HL7 Version 2.5.1	2.16.840.1.113883.12.364 (code system)	PHIN VADS Value Set. Code System: PH_CommentType_HL7_2x https://phinvads.cdc.gov/vads/ViewCodeSystem.action?id=2.16.840.1.113883.12.364
HL70369 – Specimen Role	HL7 Version 2.5.1	2.16.840.1.113883.12.369 (code system)	PHIN VADS Value Set. Code System: PH_SpecimenRole_HL7_2x https://phinvads.cdc.gov/vads/ViewCodeSystem.action?id=2.16.840.1.113883.12.369
HL70371 – Additive Preservative	HL7 Version 2.5.1	2.16.840.1.113883.12.371 (code system)	PHIN VADS Value Set. Code System: PH_AdditiveOrPreservative_HL7_2x https://phinvads.cdc.gov/vads/ViewCodeSystem.action?id=2.16.840.1.113883.12.371
HL70396 – Coding System	HL7 Version 2.5.1	2.16.840.1.113883.12.396 (code system)	PHIN VADS Value Set. Code System: PH_CodingSystem_HL7_2x https://phinvads.cdc.gov/vads/ViewCodeSystem.action?id=2.16.840.1.113883.12.396

Value Set/Code System Name	Value Set/Code System Source	Value Set/Code System Identifier	Description
HL70399 – Country Code	ISO	2.16.840.1.114222.4.11.828 (code system)	See: "Country Value Set" Also available via PHIN-VADS, at: http://phinvads.cdc.gov/vads/ViewValueSet.action?oid=2.16.840.1.114222.4.11.828
HL70429 – Production Class Code	HL7 Version 2.5.1	2.16.840.1.113883.12.429 (code system)	PHIN VADS Value Set. Code System: PH_ProductionClass_HL7_2x https://phinvads.cdc.gov/vads/ViewCodeSystem.action?id=2.16.840.1.113883.12.429
HL70444 – Name Assembly Order	HL7 Version 2.5.1	2.16.840.1.113883.12.444 (code system)	PHIN VADS Value Set. Code System: PH_ProductionClass_HL7_2x https://phinvads.cdc.gov/vads/ViewCodeSystem.action?id=2.16.840.1.113883.12.444
HL70445 – Identity Reliability Code	HL7 Version 2.5.1	2.16.840.1.113883.12.445 (code system)	PHIN VADS Value Set. Code System: PH_IdentityReliabilityCode_HL7_2x https://phinvads.cdc.gov/vads/ViewCodeSystem.action?id=2.16.840.1.113883.12.445
HL70465 – Name/Address Representation	HL7 Version 2.5.1	2.16.840.1.113883.12.465 (code system)	PHIN VADS Value Set. Code System: PH_NameAddressRepresentation_HL7_2x https://phinvads.cdc.gov/vads/ViewCodeSystem.action?id=2.16.840.1.113883.12.465

Value Set/Code System Name	Value Set/Code System Source	Value Set/Code System Identifier	Description
HL70472 – TQ Conjunction ID	HL7 Version 2.5.1	2.16.840.1.113883.12.472 (code system)	PHIN VADS Value Set. Code System: PH_TQConjunctionID_HL7_2x https://phinvads.cdc.gov/vads/ViewCodeSystem.action?id=2.16.840.1.113883.12.472
HL70482 – Order Type	HL7 Version 2.5.1	2.16.840.1.113883.12.482 (code system)	PHIN VADS Value Set. Code System: PH_OrderType_HL7_2x https://phinvads.cdc.gov/vads/ViewCodeSystem.action?id=2.16.840.1.113883.12.482
HL70483 – Authorization Mode	HL7 Version 2.5.1	2.16.840.1.113883.12.483 (code system)	PHIN VADS Value Set. Code System: PH_AuthorizationMode_HL7_2x https://phinvads.cdc.gov/vads/ViewCodeSystem.action?id=2.16.840.1.113883.12.483
HL70488 – Specimen Collection Method	HL7 Version 2.5.1	2.16.840.1.113883.12.488 (code system)	PHIN VADS Value Set. Code System: PH_SpecimenCollectionMethod_HL7_2x https://phinvads.cdc.gov/vads/ViewCodeSystem.action?id=2.16.840.1.113883.12.488
HL70490 – Specimen Rejection Reason	HL7 Version 2.5.1	2.16.840.1.113883.12.490 (code system)	PHIN VADS Value Set. Code System: PH_SpecimenRejectReason_HL7_2x https://phinvads.cdc.gov/vads/ViewCodeSystem.action?id=2.16.840.1.113883.12.490

Value Set/Code System Name	Value Set/Code System Source	Value Set/Code System Identifier	Description
HL70491 – Specimen Quality	HL7 Version 2.5.1	2.16.840.1.113883.12.491 (code system)	PHIN VADS Value Set. Code System: PH_SpecimenQuality_HL7_2x https://phinvads.cdc.gov/vads/ViewCodeSystem.action?id=2.16.840.1.113883.12.491
HL70492 – Specimen Appropriateness	HL7 Version 2.5.1	2.16.840.1.113883.12.492 (code system)	PHIN VADS Value Set. Code System: PH_SpecimenAppropriateness_HL7_2x https://phinvads.cdc.gov/vads/ViewCodeSystem.action?id=2.16.840.1.113883.12.492
HL70493 – Specimen Condition	HL7 Version 2.5.1	2.16.840.1.113883.12.493 (code system)	PHIN VADS Value Set. Code System: PH_SpecimenCondition_HL7_2x https://phinvads.cdc.gov/vads/ViewCodeSystem.action?id=2.16.840.1.113883.12.493
HL70494 – Specimen Child Role	HL7 Version 2.5.1	2.16.840.1.113883.12.494 (code system)	PHIN VADS Value Set. Code System: PH_SpecimenChildRole_HL7_2x https://phinvads.cdc.gov/vads/ViewCodeSystem.action?id=2.16.840.1.113883.12.494
HL70495 – Body Site Modifier	HL7 Version 2.5.1	N/A	HL7 v2.5.1 - Final Standard, Appendix A: Data Definition Tables, Page A-139
HL70507 – Observation Result Handling	HL7 Version 2.5.1	2.16.840.1.113883.12.507 (code system)	PHIN VADS Value Set. Code System: PH_ObservationResultHandling_HL7_2x https://phinvads.cdc.gov/vads/ViewCodeSystem.action?id=2.16.840.1.113883.12.507

Value Set/Code System Name	Value Set/Code System Source	Value Set/Code System Identifier	Description
HL70516 – Error Severity	HL7 Version 2.5.1	2.16.840.1.113883.12.516 (code system)	PHIN VADS Value Set. Code System: PH_ErrorSeverity_HL7_2x https://phinvads.cdc.gov/vads/ViewCodeSystem.action?id=2.16.840.1.113883.12.516
HL70529 – Precision	HL7 Version 2.5.1	N/A	HL7 v2.5.1 - Final Standard, Appendix A: Data Definition Tables, Page A-147

Change Log

Version	Date	Change
2.0	06/19/2017	Replaces the Electronic Laboratory Result Reporting to the Michigan Department of Community Health implementation guide from November 2011